Building the Future!

Hertz is committed to developing the technology of compressors with a continued focus on performance and energy efficiency with our motto “Building the future”.

It’s an endless journey, and whatever the conditions, Hertz will accompany you throughout this journey. We build the future together with an approach that encourages collaboration and creative problem-solving.

As Hertz, we understand all your needs for high-quality compressed air and offer products and services that will provide maximum added value to you and your processes with our quality standards and advanced engineering approach with our productive and dynamic teammates.

hertz
KOMPRESSOREN

ABOUT US

Hertz Kompressoren is the premium export brand of Dalgakiran, one of the leading air compressor producers in the world which has developed a truly international compressed air sales & service network worldwide.

Hertz Kompressoren was founded in Germany in 2005. Today, we use our more than 55 years of design and manufacturing experience to provide you the ideal air solutions for your business.

Building the Future!

With our visionary orientation, we continuously develop our products and services under the guidelines of efficiency and sustainability. We are continuously working on more efficient and robust compressors that provide the specific requirements of each industry in order to contribute to sustainability by reducing the energy consumption of the facilities.

hertz
KOMPRESSOREN

COMPRESSED AIR DRYERS

HRD - Refrigerated Type Air Dryers 06

HRD HPN - Refrigerated Type High Pressure Air Dryers 08

HRD DS - Digital Scroll Compressed Air Dryers 10

HRD H - Refrigerated Type High Temperature Compressed Air Dryers 12

HRC - Refrigerated Type Cycling (Thermal Mass) Air Dryers 14

HMD - Modular Adsorption Compressed Air Dryers 16

HMD VP - Vacuum Purge Modular Adsorption Compressed Air Dryers 18

HDA - Heatless Adsorption Compressed Air Dryers 20

HBP - Blower Purge Adsorption Compressed Air Dryers 22

HBS - Medical Air Dryers 24

hertz
KOMPRESSOREN
EMERGENCY STOP
FESTO
FESTO

What are refrigerated air dryers?

They cool the compressed air passing through them and keep that air dry down to the dew point of +3°C. Inlet and outlet filters integrated into the dryer (up to the HRD 210 model) reduce the particle level by 0.01 microns and the oil particle level by 0.01 mg/m³.

Key Features

- Very low pressure losses
- Design suitable for tropical climates
- R-134a Refrigerant
- Operates at 60°C inlet temperature and 50°C ambient temperature
- Compact design
- Minimum footprint
- Digital controller for energy savings
- High efficiency
- Ease of access
- Separate electrical and cooling sections

Model	Capacity*		Connection Size	Voltage**	Refrigerant	Maximum Working Pressure	Maximum Ambient Temperature	Maximum Inlet Temperature	Included Filter and Type	Dimensions (mm)			Weight
	m³/min	cfm				bar	°C	°C		Length	Width	Height	Kg
HRD 10	0,35	12	G ½"	230V/1/50 Hz	R-134a	16	50	60	HGKON 55 MX+MY	423	393	567	32
HRD 20	0,58	20	G ½"	230V/1/50 Hz	R-134a	16	50	60	HGKON 55 MX+MY	423	393	567	32
HRD 30	0,83	29	G ½"	230V/1/50 Hz	R-134a	16	50	60	HGKON 55 MX+MY	423	393	567	32
HRD 35	1,05	37	G ½"	230V/1/50 Hz	R-134a	16	50	60	HGKON 75 MX+MY	423	393	567	35
HRD 40	1,45	51	G ¾"	230V/1/50 Hz	R-134a	16	50	60	HGKON 155 MX+MY	473	453	832	51
HRD 50	2,17	77	G ¾"	230V/1/50 Hz	R-134a	16	50	60	HGKON 155 MX+MY	473	453	832	53
HRD 60	2,83	100	G ¾"	230V/1/50 Hz	R-134a	16	50	60	HGKON 155 MX+MY	473	453	832	55
HRD 70	3,30	117	G 1 ½"	230V/1/50 Hz	R-134a	16	50	60	HGKON 405 MX+MY	553	503	874	78
HRD 80	4,7	166	G 1 ½"	230V/1/50 Hz	R-134a	16	50	60	HGKON 405 MX+MY	553	503	874	83
HRD 90	5,9	208	G 1 ½"	230V/1/50 Hz	R-134a	16	50	60	HGKON 405 MX+MY	553	503	874	86
HRD 100	7,8	275	G 2"	230V/1/50 Hz	R-134a	16	50	60	HGKON 805 MX+MY	678	648	1157	160
HRD 110	9,8	346	G 2"	230V/1/50 Hz	R-134a	16	50	60	HGKON 805 MX+MY	678	648	1157	165
HRD 120	13,8	487	G 2"	230V/1/50 Hz	R-134a	16	50	60	HGKON 1205 MX+MY	948	728	1370	220
HRD 130	18,3	646	G 2"	230V/1/50 Hz	R-134a	16	50	60	HGKON 1205 MX+MY	948	728	1370	230
HRD 140	21,8	770	G 3"	400V/3/50Hz	R-134a	16	50	60	HGKON-1805 MX+MY	948	798	1460	270
HRD 150	27,1	957	G 3"	400V/3/50Hz	R-134a	16	50	60	HGKON-1805 MX+MY	948	798	1460	285
HRD 160	36,7	1296	G 3"	400V/3/50Hz	R-134a	16	50	60	HGKON-2775 MX+MY	1163	778	1725	392
HRD 170	43,7	1543	G 3"	400V/3/50Hz	R-134a	16	50	60	HGKON-2775 MX+MY	1163	778	1725	410
HRD 180	52,4	1850	DN100	400V/3/50Hz	R-134a	16	50	60	HGKON-5850 MX+MY	1397	847	1770	492
HRD 190	61,6	2175	DN100	400V/3/50Hz	R-134a	16	50	60	HGKON-5850 MX+MY	1397	847	1770	520
HRD 200	80,0	2825	DN100	400V/3/50Hz	R-134a	16	50	60	HGKON-5850 MX+MY	1467	1077	1930	696
HRD 210	92,0	3249	DN100	400V/3/50Hz	R-134a	16	50	60	HGKON-5850 MX+MY	1467	1077	1930	718
HRD 220	109,7	3874	DN150	400V/3/50Hz	R-134a	16	50	60	Not Included	2188	1062	1925	900
HRD 230	123,9	4375	DN150	400V/3/50Hz	R-134a	16	50	60	Not Included	2188	1062	1925	925
HRD 240	141,6	5001	DN150	400V/3/50Hz	R-134a	16	50	60	Not Included	2247	1200	2044	975
HRD 250	165,2	5834	DN200	400V/3/50Hz	R-134a	16	50	60	Not Included	2247	1200	2044	1100
HRD 260	196,7	6946	DN200	400V/3/50Hz	R-134a	16	50	60	Not Included	2550	1550	2100	1400

- Hertz reserves its rights to change the specifications without any prior notice.
* Capacity is given at atmospheric Pressure at 20 °C (ISO 1217) in accordance with norms ISO 7183-8573-1 and Pneurop 6611- Class 4-7 bar -35 °C inlet - 25 °C ambient.
** Consult sales representative for optional voltages

PRE FILTER (X)

Efficiency rating:
1 Micron particle removal & 0.5mg/m³ oil removal

FINE FILTER (Y)

Efficiency rating:
0.01 Micron particle removal & 0.01mg/m³ oil removal

PARTICLE FILTER (P)

Efficiency rating:
5 Micron particle removal
(removes desiccant particles after the dryer)

ACTIVATED CARBON FILTER (A)

Efficiency rating:
0.01 Micron particle removal & 0.003 mg/m³ oil removal

HRD Dryer Sizing Example;

If a compressor delivers 20 m³/min at 6 bar, the dryer inlet temperature is 40°C and the ambient temperature is 30°C, please choose your dryer as follows;

Dryer Capacity = 20 / 0.94 / 0.92 / 0.98 = 23,6 m³/min

The correct dryer model for this application is HRD 150.

CORRECTION FACTORS FOR HRD AIR DRYERS:								
Inlet Temperature °C	30	35	40	45	50	60	-	-
F1	1,29	1	0,92	0,78	0,65	0,45	-	-
Ambient Temperature °C	20	25	30	35	40	50	-	-
F2	1,05	1	0,98	0,93	0,84	0,7	-	-
Pressure Bar	4	6	7	8	10	12	14	16
F3	0,80	0,94	1	1,04	1,11	1,16	1,22	1,25

What are high-pressure compressed air dryers?

They ensure 100% contact between the air and refrigerant circuits. They offer excellent cooling by combining high efficiency with advanced performance.

Key Features

- Latest technology 3-in-1 design
- Low pressure difference
- Compact design with 3-in-1 heat exchanger
- Meets every capacity and power requirement
- Stainless steel, brazed, plated heat exchanger
- Size reduction and excellent heat transfer
- Corrosion prevention
- Safety test against leakages

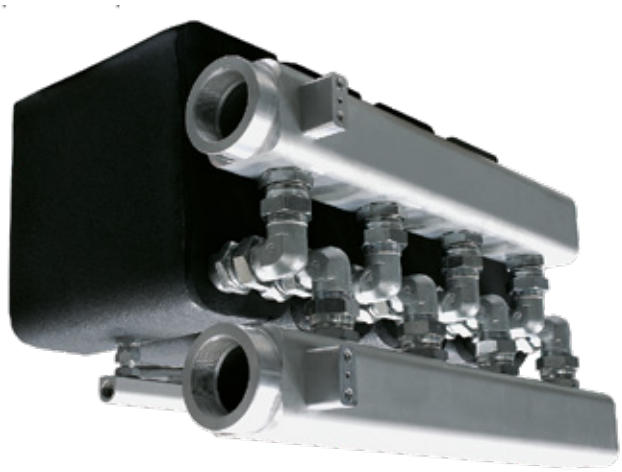

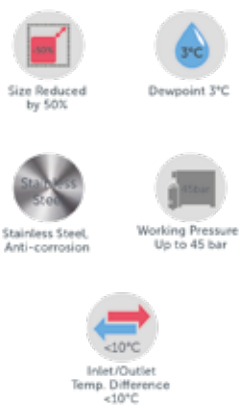

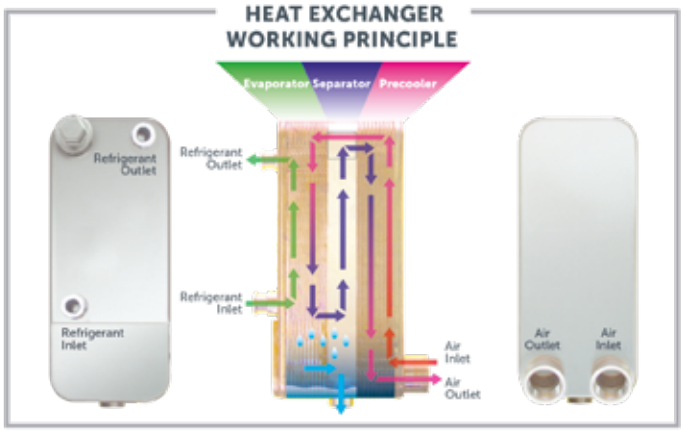

Model	Capacity*		Connection Size	Voltage	Maximum Working Pressure	Maximum Ambient Temperature	Maximum Inlet Temperature	Dimensions (mm)			Weight
	m³/min	cfm			bar	ºC	ºC	Length	Width	Height	Kg
HRD 50 HPN	0,83	29	G ¾"	230V/1/50 Hz	45	45	50	454	361	553	36
HRD 90 HPN	1,50	53	G ¾"	230V/1/50 Hz	45	45	50	454	361	553	38
HRD 150 HPN	2,50	88	G ¾"	230V/1/50 Hz	45	45	50	453	401	623	45
HRD 220 HPN	3,67	130	G ¾"	230V/1/50 Hz	45	45	50	453	401	623	45
HRD 300 HPN	5,00	177	G 1 ¹/4"	230V/1/50 Hz	45	45	50	505	451	761	70
HRD 400 HPN	6,67	236	G 1 ¹/4"	230V/1/50 Hz	45	45	50	505	451	761	72
HRD 500 HPN	8,33	294	G 1 ¹/4"	230V/1/50 Hz	45	45	50	505	451	812	78
HRD 575 HPN	9,58	338	G 1 ¹/4"	230V/1/50 Hz	45	45	50	505	451	812	80
HRD 775 HPN	12,9	456	G 1 ¹/4"	230V/1/50 Hz	45	45	50	675	501	984	115
HRD 910 HPN	15,2	537	G 1 ¹/4"	230V/1/50 Hz	45	45	50	675	501	984	120
HRD 1000 HPN	16,7	590	G 2"	230V/1/50 Hz	45	45	50	947	727	1170	218
HRD 1160 HPN	19,4	685	G 2"	230V/1/50 Hz	45	45	50	947	727	1170	220
HRD 1500 HPN	25,0	883	G 2"	230V/1/50 Hz	45	45	50	947	727	1170	225
HRD 1600 HPN	26,7	943	G 2"	400V/3/50Hz	45	45	50	947	797	1460	263
HRD 1800 HPN	30,0	1059	G 2"	400V/3/50Hz	45	45	50	947	797	1460	265
HRD 2200 HPN	36,7	1296	G 2 ¹/2"	400V/3/50Hz	45	45	50	1162	797	1495	352
HRD 2500 HPN	41,7	1473	G 2 ¹/2"	400V/3/50Hz	45	45	50	1162	797	1495	353
HRD 2700 HPN	45,0	1589	G 2 ¹/2"	400V/3/50Hz	45	45	50	1162	797	1495	355
HRD 3000 HPN	50,0	1766	G 2 ¹/2"	400V/3/50Hz	45	45	50	1162	797	1495	422
HRD 3300 HPN	55,0	1942	G 2 ¹/2"	400V/3/50Hz	45	45	50	1162	797	1495	423
HRD 3600 HPN	60,0	2119	G 2 ¹/2"	400V/3/50Hz	45	45	50	1162	797	1495	425

- Hertz reserves its rights to change the specifications without any prior nitice.

* Nominal flow is calculated at the following conditions: Inlet Pressure: 40 bar, Inlet Temperature: 35°C Ambient Temperature 25°C for other conditions please refer to the correction factor table.

PRE FILTER (X)

Efficiency rating:
1 Micron particle removal & 0.5mg/m³ oil removal

FINE FILTER (Y)

Efficiency rating:
0.01 Micron particle removal & 0.01mg/m³ oil removal

PARTICLE FILTER (P)

Efficiency rating:
5 Micron particle removal
(removes desiccant particles after the dryer)

ACTIVATED CARBON FILTER (A)

Efficiency rating:
0.01 Micron particle removal & 0.003 mg/m³ oil removal

HRD HPN Dryer Sizing Example;
If a compressor delivers 20 m³/min at 35 bar, the dryer inlet temperature is 40ºC and the ambient temperature is 30ºC, please choose your dryer as follows;

Dryer Capacity = 20 / 0,96 / 0,82 / 0,63 = 40,3 m³/min

The correct dryer model for this application is HRD 2500 HPN.

CORRECTION FACTORS FOR HRD HPN SERIES									
Pressure (bar)	20	25	30	35	40	45	-	-	-
F1	0,84	0,91	0,93	0,96	1	1,02	-	-	-
Ambient Temperature (ºC)	-	-	-	-	25	30	35	40	45
F2	-	-	-	-	1	0,93	0,87	0,82	0,79
Inlet Temperature (ºC)	-	-	-	-	35	40	45	50	-
F3	-	-	-	-	1	0,85	0,72	0,63	-

The new HRD DS series uses proprietary digital evaporator technology to deliver significant energy savings over conventional cycle and variable speed designs. Using advanced technology, it operates within different inlet flow ranges, making it by far the most efficient compressor to be used in a refrigerated air dryer. HRD DS Dryers are equipped with a true loss-free condensate drainage ensuring effective condensate drainage without any loss of compressed air. Constantly communicating with the temperature probe in the evaporator, it adjusts the cooling pressure according to the temperature of the air leaving the evaporator, thus saving energy.

Basic Components

- Digital Scroll Compressor
- Electronic Expansion Valve
- Variable Speed Fan Motor
- Well-engineered Control Algorithm
- Cutting-Edge Technology Electronic Controller

Model	Capacity (m³/min)	Voltage (V/ph/Hz)	Ref. Gas Type	Connection	Filter Set
HRD DS 120	15,50	400V/3/50	R513a	2"	HGKON 1205 MX+MY
HRD DS 130	20,00	400V/3/50	R513a	2"	HGKON 1205 MX+MY
HRD DS 140	23,13	400V/3/50	R513a	3"	HGKON 1805 MX+MY
HRD DS 150	30,00	400V/3/50	R513a	3"	HGKON 1805 MX+MY
HRD DS 170	46,25	400V/3/50	R513a	3"	HGKON-2775 MX+MY
HRD DS 180	55,50	400V/3/50	R513a	DN100	HGKON-2775 MX+MY
HRD DS 190	65,25	400V/3/50	R513a	DN100	HGKON-5850 MX+MY
HRD DS 200	84,75	400V/3/50	R513a	DN100	HGKON-5850 MX+MY
HRD DS 210	97,50	400V/3/50	R513a	DN100	HGKON-5850 MX+MY
HRD DS 220	116,25	400V/3/50	R513a	DN150	HGKON-5850 MX+MY
HRD DS 230	131,25	400V/3/50	R513a	DN150	-
HRD DS 240	150,00	400V/3/50	R513a	DN150	-
HRD DS 250	175,00	400V/3/50	R513a	DN200	-
HRD DS 260	208,33	400V/3/50	R513a	DN200	-

? *What Makes HRD DS so energy efficient and cost effective?*

Dryers with digital scroll technology based on the standard refrigerated type dryer can automatically switch to load or unload depending on real-time compressed air demand. This features makes the HRD DS series much more energy-efficient than all other types of refrigerated air dryers.

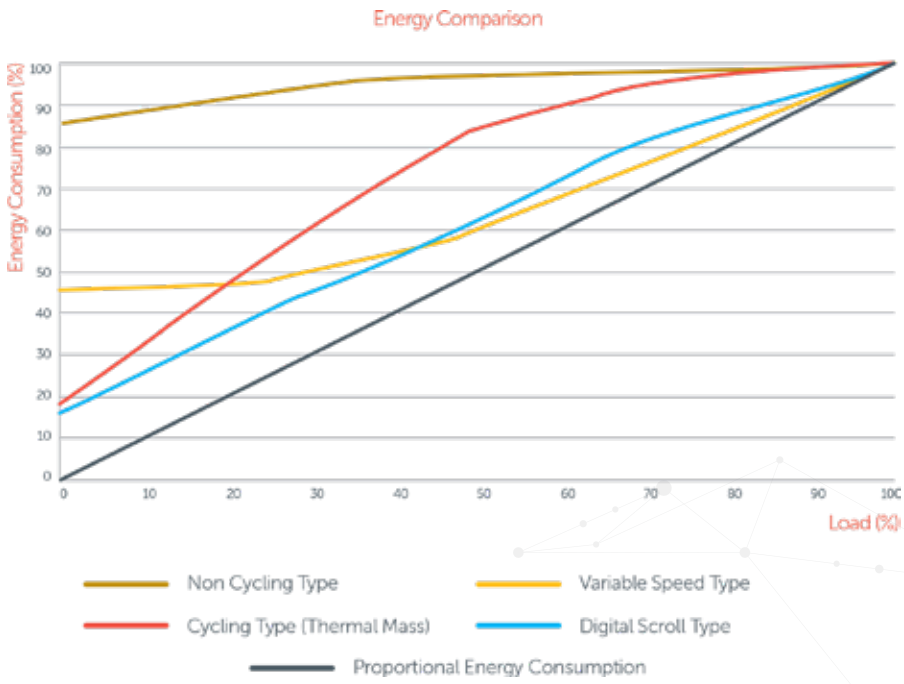

HRD H

REFRIGERATED TYPE HIGH TEMPERATURE COMPRESSED AIR DRYER

0,52-3,53 M^3/MIN

High temperature air dryers are fitted with an aftercooler to lower the inlet temperature of the compressed air. This ensures effective dew-point management.

Key Features

- High operating inlet temperature
- Integrated condenser
- Independent air-cooled aftercooler
- Moisture separator
- Automatic drain
- Environmentally friendly R134a refrigerant
- Increased compressor life span
- Operate in high ambient temperatures
- Excellent insulation
- Easy to assemble and maintain

Model	Max. Pressure		Capacity		Connection Size	Voltage (V/ph/Hz)	Dimensions (mm)			Weight (kg)	Controller	Refrigerant Type
	bar	psi	m^3/min	cfm			Length	Width	Height			
HRD H 31	16	232	0,52	18	G ½"	230/ 1 /50	445	445	955	62	DigiPro	R134a
HRD H 52	16	232	0,87	31	G ½"	230/ 1 /50	445	445	955	62	DigiPro	R134a
HRD H 75	16	232	1,25	44	G ½"	230/ 1 /50	445	445	955	63	DigiPro	R134a
HRD H 106	16	232	1,77	62	G ¾"	230/ 1 /50	445	445	955	64	DigiPro	R134a
HRD H 160	16	232	2,67	94	G ¾"	230/ 1 /50	625	510	910	88	DigiPro	R134a
HRD H 212	16	232	3,53	125	G ¾"	230/ 1 /50	625	510	910	97	DigiPro	R134a

CORRECTION FACTORS FOR HRD H SERIES												
Pressure (bar)	4	5	6	7	8	8,5	10	11	12	13	14	16
F1	0,70	0,75	0,80	0,83	0,86	0,90	0,93	0,96	1	1,1	1,12	1,15
Ambient Temperature °C	24	29	35	38	40	46	49	-	-	-	-	-
F2	1,10	1,07	1,03	1,00	0,96	0,82	0,55	-	-	-	-	-
Inlet Temperature °C	32	38	65	82	93	98	104	-	-	-	-	-
F3	1,30	1,27	1,06	1,00	0,85	0,78	0,75	-	-	-	-	-

Correction Formula: Dryer Capacity = Air Delivery Capacity of the Compressors / F1 / F2 / F3

These types of dryers consume energy dependent on air flow. The dryer's cooling system cools the water-glycol mixture down to 1°C and holds this mixture in a stainless steel container. A small pump circulates the water-glycol mixture to cool the compressed air. The cooling system's compressor turns off when the mixture reaches the required temperature resulting in considerable energy savings.

Advantages

- Energy savings wiht capacity control
- 3°C dew point
- Very low pressure drop
- Suitable for tropical conditions
- Environmentally friendly R513a refrigerant
- Large condenser
- Operates at 60°C inlet temperature and in 50°C ambient temperature
- Stainless steel components
- High efficiency

Model	Max. Pressure		Capacity		Connection Size	Filter Set	Voltage (V/ph/Hz)	Dimensions (mm)			Weight (kg)	Controller	Refrigerant Type
	bar	psi	m³/min	cfm				Length	Width	Height			
HRC 210	16	232	3,5	124	G 1 1/2"	HGKON405 MX+MY	230 / 1 / 50	777	747	1378	101	DigiPro	R513a
HRC 305	16	232	5,08	1800	G 1 1/2"	HGKON405 MX+MY	230 / 1 / 50	777	747	1378	112	DigiPro	R513a
HRC 375	16	232	6,25	221	G 1 1/2"	HGKON405 MX+MY	230 / 1 / 50	777	747	1378	122	DigiPro	R513a
HRC 495	16	232	8,25	291	G 2"	HGKON805 MX+MY	230 / 1 / 50	855	725	1505	178	DigiPro	R513a
HRC 623	16	232	10,4	366	G 2"	HGKON1205 MX+MY	230 / 1 / 50	855	725	1505	184	DigiPro	R513a
HRC 930	16	232	15,5	547	G 2"	HGKON1205 MX+MY	230 / 1 / 50	830	730	1765	242	DigiPro	R513a
HRC 1200	16	232	20,0	706	G 2"	HGKON1205 MX+MY	400 / 3 /50	830	730	1765	253	ESD-3	R513a
HRC 1388	16	232	23,1	817	G 3"	HGKON-1805 MX+MY	400 / 3 /50	1150	800	1740	295	ESD-3	R513a
HRC 1800	16	232	30,0	1059	G 3"	HGKON-1805 MX+MY	400 / 3 /50	1150	800	1740	310	ESD-3	R513a
HRC 2500	16	232	41,7	1471	G 3"	HGKON-1805 MX+MY	400 / 3 /50	1315	880	1790	411	ESD-3	R513a
HRC 2775	16	232	46,3	1633	G 3"	HGKON-2275 MX+MY	400 / 3 /50	1315	880	1790	443	ESD-3	R513a
HRC 3330	16	232	55,5	1960	DN100	HGKON-5850 MX+MY	400 / 3 /50	1400	850	1840	537	ESD-3	R513a
HRC 3915	16	232	65,3	2304	DN100	HGKON-5850 MX+MY	400 / 3 /50	1400	850	1840	557	ESD-3	R513a
HRC 5085	16	232	84,8	2993	DN100	HGKON-5850 MX+MY	400 / 3 /50	1620	1080	1995	737	ESD-3	R513a
HRC 5850	16	232	97,5	3443	DN100	HGKON-5850 MX+MY	400 / 3 /50	1620	1080	1995	760	ESD-3	R513a
HRC 6975	16	232	116,3	4105	DN150	-	400 / 3 /50	2190	1065	2025	941	ESD-3	R513a
HRC 7875	16	232	131,3	4634	DN150	-	400 / 3 /50	2190	1065	2025	963	ESD-3	R513a
HRC 9000	16	232	150	5297	DN150	-	400 / 3 /50	2900	1200	2120	1025	ESD-3	R513a
HRC 10500	16	232	175	6179	DN200	-	400 / 3 /50	2900	1200	2120	1162	ESD-3	R513a
HRC 12500	16	232	208,3	7356	DN200	-	400 / 3 /50	2550	1550	2170	1480	ESD-3	R513a

Correction Formula: Dryer Capacity = Air Delivery Capacity of the Compressors / F1 / F2 / F3

CORRECTION FACTORS FOR HRC SERIES								
Pressure (bar)	4	6	7	8	10	12	14	16
F1	0,80	0,94	1	1,04	1,11	1,16	1,22	1,25
Ambient Temperature °C	20	25	30	35	40	50	-	-
F2	1,05	1	0,98	0,93	0,84	0,70	-	-
Inlet Temperature °C	30	35	40	45	50	60	-	-
F3	1,29	1	0,92	0,78	0,65	0,45	-	-

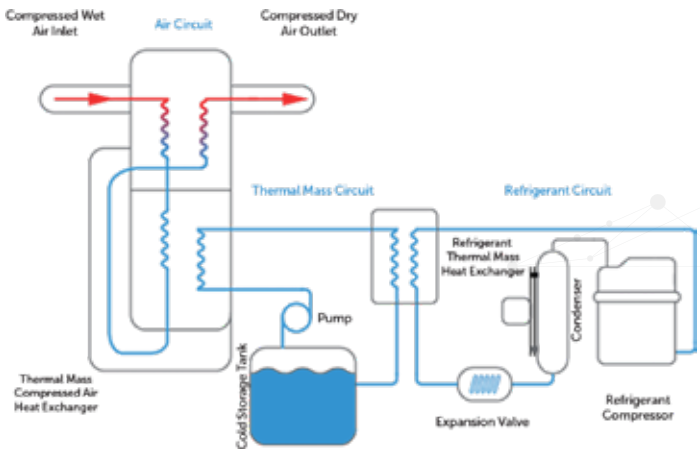

HMD model chemical dryers use a modular design for a lightweight, compact body. Having half the size and weight of traditional twin-tower chemical dryers, they provide users with the advantage of flexible installation. This is one of the chemical air dryer models with the lowest pressure drop in the world with its highly engineered inlet valve and discharge manifold design.

Advantages

- Low footprint, lightweight, compact design
- Corrosion-resistant aluminium structure
- Problem-free and reliable electronic control
- Can be mounted on the floor, bench, or wall
- Suitable layout for any workplace
- Easy to install and maintain
- High efficiency and flexibility
- Energy efficient
- Dew point from -40°C to -70°C (optional)

Model	Max. Pressure		Capacity		Connection Size	Filter Set	Voltage	Dimensions (mm)			Weight	Controller
	bar	psi	m³/min	cfm			(V/ph/Hz)	Length	Width	Height	kg	
HMD 3	16	232	0,08	3	G 1/2"	HGON35 MX+MY+MP	230/1/50-60	336	320	558	17	Crouzet Millenium 3
HMD 5	16	232	0,17	6	G 1/2"	HGON35 MX+MY+MP	230/1/50-60	320	320	633	19	Crouzet Millenium 3
HMD 10	16	232	0,33	12	G 1/2"	HGON35 MX+MY+MP	230/1/50-60	320	320	908	27	Crouzet Millenium 3
HMD 15	16	232	0,42	15	G 1/2"	HGON35 MX+MY+MP	230/1/50-60	350	370	808	31	Crouzet Millenium 3
HMD 20	16	232	0,58	21	G 1/2"	HGON55 MX+MY+MP	230/1/50-60	350	370	1108	42	Crouzet Millenium 3
HMD 25	16	232	0,75	26	G 1/2"	HGON55 MX+MY+MP	230/1/50-60	350	370	1258	48	Crouzet Millenium 3
HMD 30	16	232	0,83	29	G 1/2"	HGON55 MX+MY+MP	230/1/50-60	350	370	1508	54	Crouzet Millenium 3
HMD 40	16	232	1,17	41	G 1 1/2"	HGON100 MX+MY+MP	230/1/50-60	495	410	1250	71	Crouzet Millenium 3
HMD 50	16	232	1,42	50	G 1 1/2"	HGON100 MX+MY+MP	230/1/50-60	495	410	1400	78	Crouzet Millenium 3
HMD 60	16	232	1,67	59	G 1 1/2"	HGON100 MX+MY+MP	230/1/50-60	495	410	1750	92	Crouzet Millenium 3
HMD 75	16	232	2,17	77	G 1 1/2"	HGON150 MX+MY+MP	230/1/50-60	622	430	1300	120	Crouzet Millenium 3
HMD 100	16	232	2,83	100	G 1 1/2"	HGON225 MX+MY+MP	230/1/50-60	622	430	1450	133	Crouzet Millenium 3
HMD 120	16	232	3,33	118	G 1 1/2"	HGON225 MX+MY+MP	230/1/50-60	622	430	1750	152	Crouzet Millenium 3
HMD 180	16	232	5,00	177	G 1 1/2"	HGON400 MX+MY+MP	230/1/50-60	734	410	1499	186	Crouzet Millenium 3
HMD 240	16	232	6,67	235	G 1 1/2"	HGON500 MX+MY+MP	230/1/50-60	889	410	1497	235	Crouzet Millenium 3
HMD 340	16	232	9,6	340	2"	HGON600 MX+MY+MP	230/1/50-60	994	400	1654	400	Crouzet Millenium 3
HMD 400	16	232	11,3	400	2"	HGON800 MX+MY+MP	230/1/50-60	1335	400	1554	600	Crouzet Millenium 3
HMD 500	16	232	14,2	500	2"	HGON1000 MX+MY+MP	230/1/50-60	1505	400	1654	700	Crouzet Millenium 3
HMD 590	16	232	16,7	590	2"	HGON1000 MX+MY+MP	230/1/50-60	1675	400	1754	850	Crouzet Millenium 3
HMD 735	16	232	20,8	735	3"	HGON1550 MX+MY+MP	230/1/50-60	1675	400	2054	950	Crouzet Millenium 3
HMD 890	16	232	25,0	890	3"	HGON1550 MX+MY+MP	230/1/50-60	1845	400	2054	1050	Crouzet Millenium 3
HMD 1060	16	232	30,0	1060	3"	HGON2000 MX+MY+MP	230/1/50-60	2015	400	2054	1200	Crouzet Millenium 3

CORRECTION FACTORS FOR HMD SERIES												
Pressure (bar)	4,5	5	6	7	8	9	10	11	12	13	14	15
F1	0,69	0,75	0.88	1	1,12	1,25	1,37	1,50	1,62	1,74	1,87	1,99
Inlet Temperature (°C)	20	25	30	35	40	45	50	-	-	-	-	-
F2	1	1	1	1	0,80	0,73	0,59		-	-	-	-

Correction Formula: Dryer Capacity = Air Delivery Capacity of the Compressors / F1 / F2

HMD Dryer Sizing Example;
If a compressor delivers 2,0 m³/min at 10 bar, the dryer inlet temperature is 40 °C. please choose your dryer as follows;

Dryer Capacity = 2,0 / 1,37 / 0,80 = 1,82 m³/min

The correct dryer model for this application is HMD 75.

PRE FILTER (X)
Efficiency rating:
1 Micron particle removal & 0.5mg/m³ oil removal

FINE FILTER (Y)
Efficiency rating:
0.01 Micron particle removal & 0.01mg/m³ oil removal

PARTICLE FILTER (P)
Efficiency rating:
5 Micron particle removal
(removes desiccant particles after the dryer)

ACTIVATED CARBON FILTER (A)
Efficiency rating:
0.01 Micron particle removal & 0.003 mg/m³ oil removal

HMD-VP

VACUUM PURGE MODULAR ADSORPTION COMPRESSED AIR DRYERS

1,66-20,83 M^3/MIN

The HMD-VP Series modular, vacuum purge heatless desiccant air dryers remove water vapour from the compressed air, stop corrosion, and prevent the growth of micro-organisms when supplying the clean air crucial for production. HMD-VP Series air dryers efficiently and reliably supply the system with high-quality dry air with a dew point of -40 °C or optionally a dew point of -70 °C. This extends the machinery's life span, keeps maintenance costs to a minimum, and results in safe and healthy production. The new vacuum purge technology minimises air loss during regeneration and optimises production levels.

Areas of Use

- Food and Beverage
- Pharmaceutical
- Automotive
- Electronic
- All industries requiring a dew point of -40°C or optional -70°C.

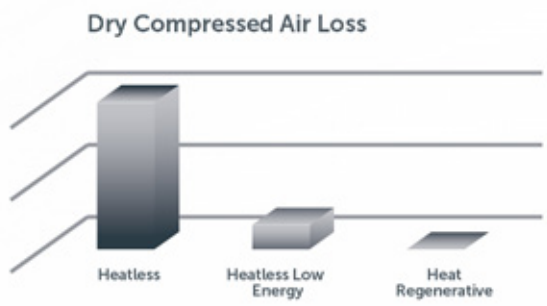

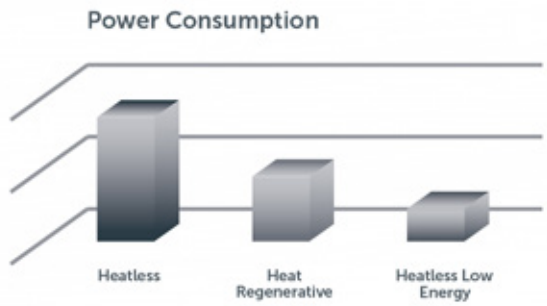

Model	Capacity	Vacuum Pump	Filter Set	Connection Size	Voltage	Max. Working Pressure
	(m³/min)	(kW)			(V)	(bar)
HMD-VP-60	1,66	1,1	HGON 100	1 1/2"	400/3/50	16
HMD-VP-75	2,16	1,1	HGON 150	1 1/2"	400/3/50	16
HMD-VP-100	2,83	1,3	HGON 225	1 1/2"	400/3/50	16
HMD-VP-120	3,33	2,2	HGON 225	1 1/2"	400/3/50	16
HMD-VP-180	5	2,2	HGON 400	1 1/2"	400/3/50	16
HMD-VP-240	6,66	3	HGON 500	1 1/2"	400/3/50	16
HMD-VP-340	9,58	4	HGON 600	1 1/2"	400/3/50	16
HMD-VP-400	11,33	4	HGON 800	2"	400/3/50	16
HMD-VP-500	14,16	5,5	HGON 1000	2"	400/3/50	16
HMD-VP-590	16,66	5,5	HGON 1000	2"	400/3/50	16
HMD-VP-740	20,83	7,5	HGON 1550	3"	400/3/50	16

AIR LINE DESIGN

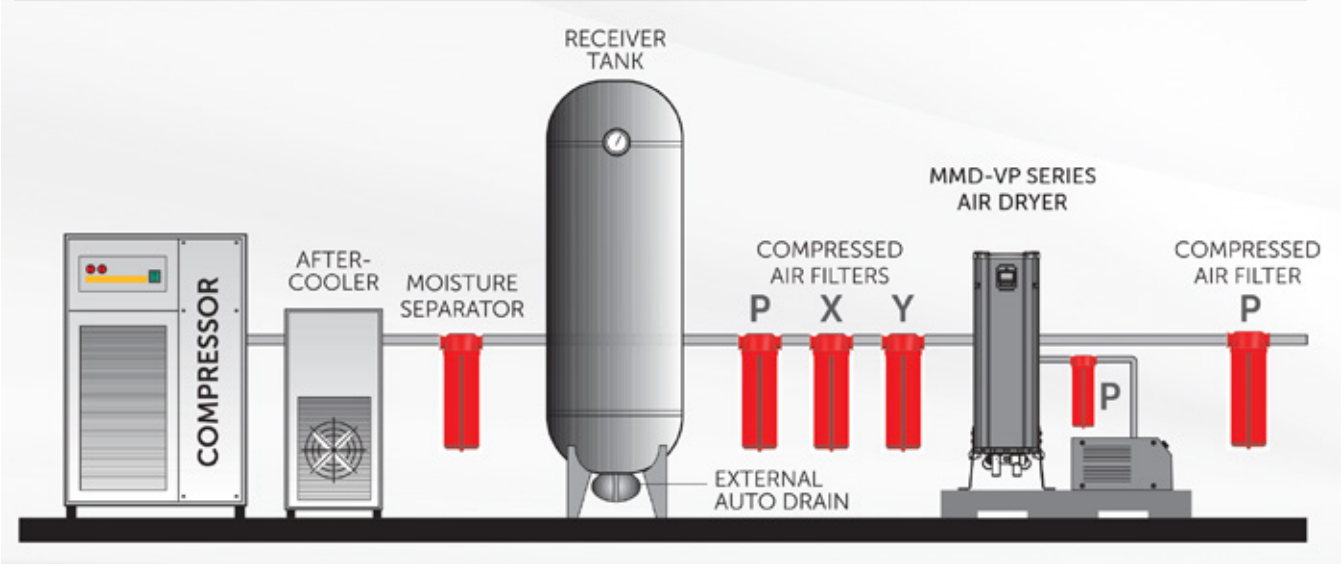

Correct Model = (Compressor Capacity)/[(F1) . (F2)]			
Inlet Temperature (°C)	F1	Pressure (bar)	F2
20	1	4,5	0,69
25	1	5	0,75
30	1	6	0,88
35	1	7	1
40	0,8	8	1,12
45	0,73	9	1,25
50	0,59	10	1,25
–	–	11	1,5
–	–	12	1,62
–	–	13	1,74
–	–	14	1,87
–	–	15	1,99
–	–	16	2,11

Designed to supply clean and very dry air for critical applications. They have a constant dew point of -40°C (-70°C optional).

They come with inlet and outlet line filters to keep the air flow clean and to protect the chemical mixture inside the tanks.

Advantages

- Uninterrupted and perfect operation
- -40°C (-70°C optional) pressurized dew point
- Optional dew point monitoring and control
- 16 and 40 bar working pressure options
- Constant dew point
- Easy-to-use control panel
- Touchscreen interface
- User friendly
- Different language options

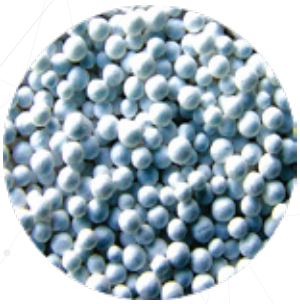

Model	Max. Pressure		Capacity		Connection Size	Filters	Voltage	Dimensions (mm)			Weight	Controller
	bar	psi	m³/min	cfm			V/ph/Hz	Length	Width	Height	kg	
HDA 130	10	145	2,17	77	G 1"	HGON150 MX+MY+MP	230/1/50-60	814	600	1312	160	Crouzet Millenium 3
HDA 185	10	145	3,08	109	G 1"	HGON225 MX+MY+MP	230/1/50-60	806	600	1566	180	Crouzet Millenium 3
HDA 250	10	145	4,17	147	G 1"	HGON300 MX+MY+MP	230/1/50-60	772	760	1580	200	Crouzet Millenium 3
HDA 300	10	145	5,00	177	G 1 1/2"	HGON300 MX+MY+MP	230/1/50-60	900	690	1558	250	Crouzet Millenium 3
HDA 360	10	145	6,00	212	G 1 1/2"	HGON400 MX+MY+MP	230/1/50-60	900	690	1558	250	Crouzet Millenium 3
HDA 440	10	145	7,33	259	G 1 1/2"	HGON500 MX+MY+MP	230/1/50-60	900	698	1759	340	Crouzet Millenium 3
HDA 575	10	145	9,58	338	G 1 1/2"	HGON600 MX+MY+MP	230/1/50-60	900	680	1991	500	Crouzet Millenium 3
HDA 680	10	145	11,3	400	G 2"	HGON800 MX+MY+MP	230/1/50-60	960	680	2216	535	Crouzet Millenium 3
HDA 850	10	145	14,2	500	G 2"	HGON1000 MX+MY+MP	230/1/50-60	1016	857	2277	750	Crouzet Millenium 3
HDA 1000	10	145	16,7	589	G 2"	HGON1200 MX+MY+MP	230/1/50-60	1075	1010	2386	755	Crouzet Millenium 3
HDA 1250	10	145	20,8	736	DN80	HGON1550 MX+MY+MP	230/1/50-60	1294	1100	2413	1000	Crouzet Millenium 3
HDA 1500	10	145	25,0	883	DN80	HGON1550 MX+MY+MP	230/1/50-60	1300	1010	2547	1050	Crouzet Millenium 3
HDA 1800	10	145	30,0	1059	DN80	HGON2000 MX+MY+MP	230/1/50-60	1513	1110	2479	1215	Crouzet Millenium 3
HDA 2200	10	145	36,7	1295	DN80	HGON2700 MX+MY+MP	230/1/50-60	1460	1110	2793	1550	Crouzet Millenium 3
HDA 2700	10	145	45,0	1589	DN80	HGON2700 MX+MY+MP	230/1/50-60	1533	1252	2831	1890	Crouzet Millenium 3
HDA 3200	10	145	53,3	1883	DN100	HGO3400 MX+MY+MP	230/1/50-60	1653	1212	3054	2240	Crouzet Millenium 3
HDA 3600	10	145	60,0	2119	DN100	HGO4500 MX+MY+MP	230/1/50-60	1653	1210	3268	2330	Crouzet Millenium 3
HDA 4400	10	145	73,3	2590	DN100	HGO4500 MX+MY+MP	230/1/50-60	1905	1535	2910	3000	Crouzet Millenium 3
HDA 5000	10	145	83,3	2943	DN150	HGO5400 MX+MY+MP	230/1/50-60	1843	1714	3382	3180	Crouzet Millenium 3
HDA 6300	10	145	105,0	3708	DN150	HF6500 MX+MY+MP	230/1/50-60	2114	1693	3328	3450	Crouzet Millenium 3
HDA 7200	10	145	120,0	4238	DN150	HF8500 MX+MY+MP	230/1/50-60	2518	1795	3047	3600	Crouzet Millenium 3
HDA 8800	10	145	146,7	5179	DN150	HF8500 MX+MY+MP	230/1/50-60	2518	1795	3341	3850	Crouzet Millenium 3
HDA 10800	10	145	180,0	6357	DN200	HF11000 MX+MY+MP	230/1/50-60	2583	1875	3747	4200	Crouzet Millenium 3

CORRECTION FACTORS FOR HDA DRYERS							
Bar	4.5	5	6	7	8	9	10
	0,69	0,75	0,88	1	1,12	1,25	1,37
Inlet Temp. °C	20	25	30	35	40	45	50
	1	1	1	1	0,80	0,73	0,59

HDA Dryer Sizing Example;
If a compressor delivers 10 m³/min at 6 bar, the dryer inlet temperatur e is 40 °C. please choose your dryer as follows;

Dryer Capacity = 10 / 0,88 / 0,80 = 14,2 m³/min

The correct dryer model for this application is HDA 850.

PRE FILTER (X)

Efficiency rating:
1 Micron particle removal & 0.5mg/m³ oil removal

FINE FILTER (Y)

Efficiency rating:
0.01 Micron particle removal & 0.01mg/m³ oil removal

PARTICLE FILTER (P)

Efficiency rating:
5 Micron particle removal
(removes desiccant particles after the dryer)

ACTIVATED CARBON FILTER (A)

Efficiency rating:
0.01 Micron particle removal & 0.003 mg/m³ oil removal

They use a blower to draw in the ambient air and pass it through a heater. The heated air is sent in the opposite direction to the drying flow. This removes the moisture from the chemical substance pores. The advanced control system continuously monitors dew point and adjusts the temperature. This results in energy savings. The heater is insulated for high energy efficiency.

Advantages

- Dew point monitoring and control
- Computer control
- Status, alarm, and pressure display
- Remote start and stop
- Low-pressure alarm
- High-pressure switches and alarms
- Externally heated or heat-free operation
- Reliable electronic control units
- User friendly and Different language options

Model	Max. Pressure		Capacity		Connec-tion Size	Filter Set	Voltage	Dimensions (mm)			Controller
	bar	psi	m³/min	cfm			V/ph/Hz	Length	Width	Height	
HBP 850	10	145	14,2	500	G 2"	HGON1000 MX+MY+MP(H)	400 / 3 / 50	1296	1180	2299	Schneider
HBP 1000	10	145	16,7	589	G 2"	HGON1000 MX+MY+MP(H)	400 / 3 / 50	1200	1310	2415	Schneider
HBP 1250	10	145	20,8	736	DN80	HGON1550 MX+MY+MP(H)	400 / 3 / 50	1610	1270	2468	Schneider
HBP 1500	10	145	25,0	883	DN80	HGON1550 MX+MY+MP(H)	400 / 3 / 50	1610	1270	2563	Schneider
HBP 1800	10	145	30,0	1059	DN80	HGON2000 MX+MY+MP(H)	400 / 3 / 50	1563	1515	2479	Schneider
HBP 2200	10	145	36,7	1295	DN80	HGON2700 MX+MY+MP(H)	400 / 3 / 50	1563	1455	2789	Schneider
HBP 2700	10	145	45,0	1589	DN80	HGON2700 MX+MY+MP(H)	400 / 3 / 50	1615	1514	2836	Schneider
HBP 3200	10	145	53,3	1883	DN100	HGO3400 MX+MY+MP(H)	400 / 3 / 50	1710	1660	3054	Schneider
HBP 3600	10	145	60,0	2119	DN100	HGO4500 MX+MY+MP(H)	400 / 3 / 50	1710	1660	3268	Schneider
HBP 4400	10	145	73,3	2590	DN100	HGO4500 MX+MY+MP(H)	400 / 3 / 50	1975	2492	2910	Schneider
HBP 5000	10	145	83,3	2943	DN 150	HGO5400 MX+MY+MP(H)	400 / 3 / 50	2045	2560	3382	Schneider
HBP 6300	10	145	105,0	3708	DN150	HF6500 MX+MY+MP(H)	400 / 3 / 50	2090	2963	3328	Schneider
HBP 7200	10	145	120,0	4238	DN150	HF8500 MX+MY+MP(H)	400 / 3 / 50	2020	3363	3047	Schneider
HBP 8800	10	145	146,7	5179	DN150	HF8500 MX+MY+MP(H)	400 / 3 / 50	2020	3363	3341	Schneider
HBP 10800	10	145	180,0	6357	DN200	HF11000 MX+MY+MP(H)	400 / 3 / 50	2492	3481	3765	Schneider
HBP 12000	10	145	200,0	7063	DN200	HF11000 MX+MY+MP(H)	400 / 3 / 50	*	*	*	Schneider
HBP 16000	10	145	267,0	9429	DN200	HF14000 MX+MY+MP(H)	400 / 3 / 50	*	*	*	Schneider

Dew point monitoring and control are standard.
* Please contact the sales consultant.

CORRECTION FACTORS FOR HBP AIR DRYERS							
Bar	4.5	5	6	7	8	9	10
	0,69	0,75	0,88	1	1,12	1,25	1,37
Inlet Temp. °C	20	25	30	35	40	45	-
	1	1	1	1	0,80	0,73	-

HBP Dryer Sizing Example;

If a compressor delivers 35 m³/min at 6 bar, the dryer inlet temperature is 40 °C. please choose your dryer as follows;

Dryer Capacity = 35 / 0,88 / 0,80 = 49,7 m³/min

The correct dryer model for this application is HBP 3200.

PRE FILTER (X)

Efficiency rating:
1 Micron particle removal & 0.5mg/m³ oil removal

FINE FILTER (Y)

Efficiency rating:
0.01 Micron particle removal & 0.01mg/m³ oil removal

PARTICLE FILTER (P)

Efficiency rating:
5 Micron particle removal
(removes desiccant particles after the dryer)

ACTIVATED CARBON FILTER (A)

Efficiency rating:
0.01 Micron particle removal & 0.003mg/m³ oil removal

Our medical air dryers will provide the clean, dry air necessary to keep your breathing air treatment processes safe. It is designed to be used as an addition to your plant air source by converting compressed air to breathable air for those individuals working in and around a hazardous process. Hertz breathing air purifiers are provided to destroy harmful substances in the air in accordance with applicable standards.

Contaminants	CSA Z180.1	European Pharmacopoeia	OHSA Grade D
Water	Pressure dew point of 5°C below lowest system temp.	67 ppm (-45°C atmospheric dew point)	-
Oil/Lubricant	<1 mg/m³	0,1 mg/m³	5 mg/m³
Carbon Dioxide (CO_2)	<500 ppm	<500 ppm	<1000 ppm
Carbon Monoxide (CO)	<5 ppm	<5 ppm	<10 ppm
Nitrogen Oxides ($NO+NO_2$)	-	<2 ppm	-
Sulphur Dioxide (SO_2)	-	<1 ppm	-
Oxygen (O_2)	-	21±1	-
Taste and Odor	-	Free	-

Model	Capacity		Max. Pressure (bar)	Connection Size	Replacement Filter Kit Model	Voltage	
	(m³/min)	(cfm)					
HBS 5	0,17	5	16	G 1/2"	G100-HELM	230/1/50-60	MODULAR
HBS 10	0,33	10	16	G 1/2"	G100-HELM	230/1/50-60	
HBS 15	0,42	15	16	G 1/2"	G100-HELM	230/1/50-60	
HBS 20	0,58	20	16	G 1/2"	G100-HELM	230/1/50-60	
HBS 25	0,75	25	16	G 1/2"	G150-HELM	230/1/50-60	
HBS 30	0,83	30	16	G 1/2"	G200-HELM	230/1/50-60	
HBS 40	1,17	40	16	G 1 1/2"	G250-HELM	230/1/50-60	
HBS 50	1,42	50	16	G 1 1/2"	G300-HELM	230/1/50-60	
HBS 60	1,67	60	16	G 1 1/2"	G500-HELM	230/1/50-60	
HBS 75	2,17	75	16	G 1 1/2"	G600-HELM	230/1/50-60	
HBS 100	2,83	100	16	G 1 1/2"	G851-HELM	230/1/50-60	
HBS 120	3,33	120	16	G 1 1/2"	G1210-HELM	230/1/50-60	
HBS 180	5,00	180	16	G 1 1/2"	HELM 300	230/1/50-60	
HBS 240	6,67	240	16	G 1 1/2"	HELM 300	230/1/50-60	
HBS 250	7,33	250	16	G 1 1/2"	HELM 300	230/1/50-60	TWIN TOWER
HBS 300	9,60	300	16	G 1 1/2"	HELM 600	230/1/50-60	
HBS 400	11,3	400	16	G 2''	HELM 600	230/1/50-60	
HBS 500	14,2	500	16	G 2''	HELM 600	230/1/50-60	
HBS 600	16,7	600	16	G 2''	HELM 600	230/1/50-60	
HBS 700	20,8	700	16	DN80	HELM 800	230/1/50-60	
HBS 800	25,0	800	16	DN80	HELM 1200	230/1/50-60	
HBS 1000	28,3	1000	16	DN80	HELM 1200	230/1/50-60	
HBS 1250	36,7	1250	16	DN80	HELM 1600	230/1/50-60	

FILTRATION, SEPARATION AND AIR RECEIVER

HGON - Compressed Airline Filters 28

HHGO - High Pressure Airline Filters 30

HG MSS - Medical Sterile Filters 31

HF - Flanged Compressed Air Filters 32

HG WS - Water Separators 34

HF WS - Flanged Water Separators 35

HELM-C - Carbolescers 36

HAR - Air Receivers 38

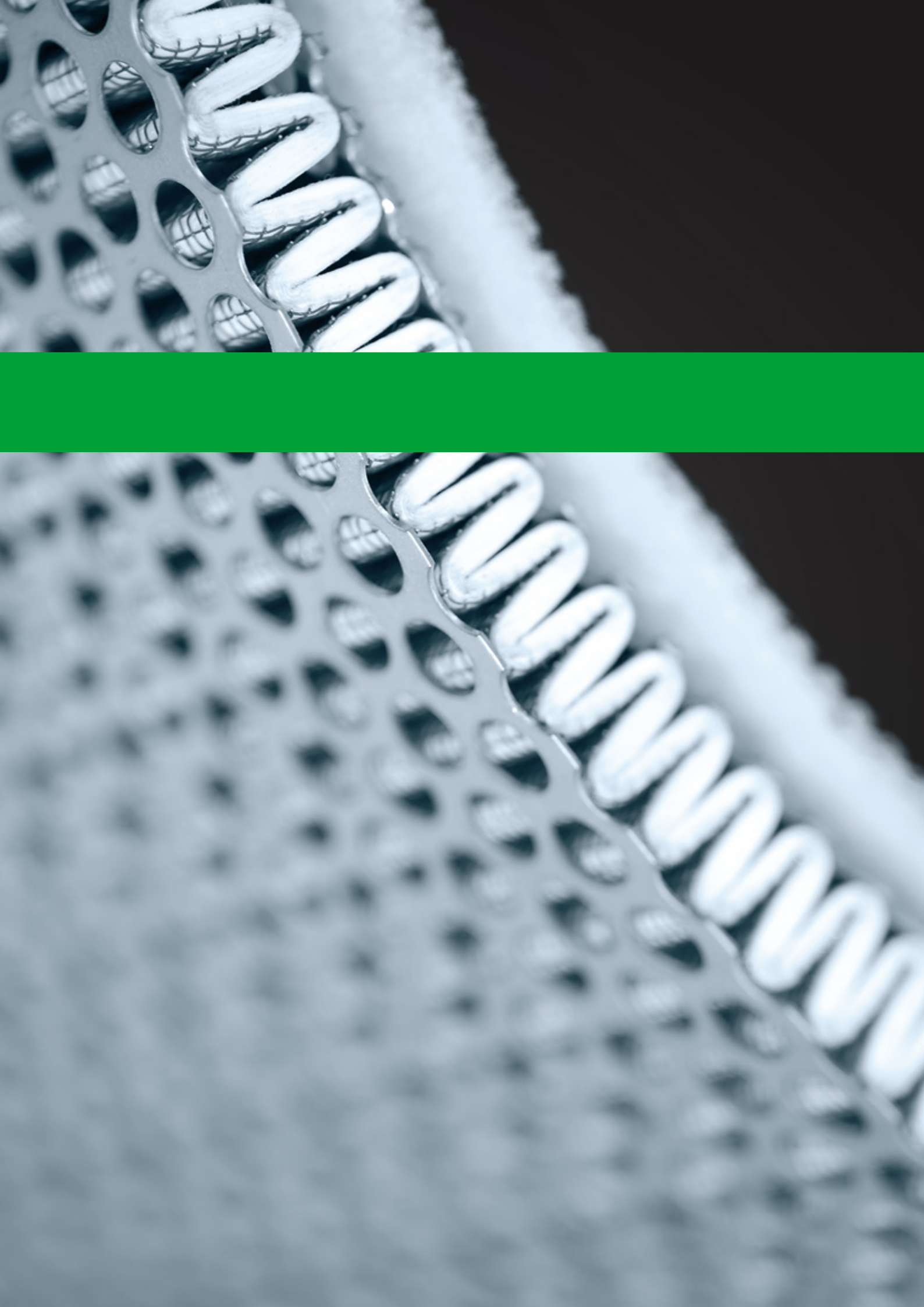

Hertz's HGON Series of Industrial Air Filters offer its compressed air users high-efficiency filtration with low pressure losses. Having more port sizes, it delivers a reliable performance, minimising air contamination in compressed air systems. The innovative "Zero Clearance" design allows users to assemble and replace the filter and other components in any compressed air unit easily. Constructed of aluminium, the HGON series is built to last, meets PED and ISO 8573 standards, and is extremely economical.

Advantages

- Air flow from 35 m³/h to 5400 m³/h
- NPT/BSP pipe sizes range from ¼" to 4" inclusive
- Pore-free aluminium construction
- Options:
- "Standard Drain" with a ½" connector or
- "Drain-free" with a ½" connector and adaptor.
- Neatly designed connection clips and wall apparatus
- ISO 8573-compliant production
- Zero clearance
- Anodised
- Locking System Indicator

Model	Connection Size	Flow Rate		Max. Working Pressure (bar)	Element Model	Housing Dimensions (mm)				
		(m^3/min)	cfm			A	B	C	D	E
HGON-35	G 1/2"	0,58	20	20	MON35	90	36,5	214	192	19
HGON-55	G 1/2"	0,92	32	20	MON55	90	36,5	251,5	230	19
HGON-70	G 1/2"	1,17	41	20	MON70	128	45	273	249,5	32
HGON-100	G 1/2"	1,67	59	20	MON100	128	45	302,5	279	32
HGON-125	G 1/2"	2,08	73	20	MON125	128	45	343	319,5	32
HGON-150	G 1"	2,50	88	20	MON150	140	45	369	334,5	31
HGON-225	G 1"	3,75	132	20	MON225	140	45	398	364,5	31
HGON-300	G 1 1/2"	5,00	177	20	MON300	140	45	474	432	31
HGON-400	G 1 1/2"	6,67	235	20	MON400	140	45	564	522	31
HGON-500	G 1 1/2"	8,33	295	20	MON500	151	45	511	464,5	25
HGON-600	G 1 1/2"	10,00	353	20	MON600	151	45	626	579,5	25
HGON-800	G 2"	13,33	471	20	MON800	151	45	696	649,5	25
HGON-1000	G 2"	16,67	588	20	MON1000	151	45	851	804,5	25
HGON-1200	G 2"	20,00	706	20	MON1200	151	45	976	929,5	25
HGON-1550	G 3"	25,83	912	20	MON1550	240	45	707	659,5	25
HGON-2000	G 3"	33,33	1177	20	MON2000	240	45	862	814,5	25
HGON-2700	G 3"	45	1589	20	MON2700	240	45	987	939,5	25
HGO 3400	DN 100	57	2013	16	MO3400	360	45	871	810	30
HGO 4500	DN 100	75	2649	16	MO4500	360	45	926	865	30
HGO 5400	DN 100	90	3178	16	MO5400	360	45	1070	1009	30

Head Clamping

Head clamping connects filters in series without the need for more pipes and uses connection clamps to join multiple filters together. Wall-mounting apparatus lets you fix the filters to the walls with ease.

Drainage Pipes

Drainage pipes support the flow of moisture.

Correction Factor

Multiply the model flow rate shown in the table below by the correction factor corresponding to the working pressure to calculate the maximum flow rate of the filter model.

Operating Pressure (barg)	3	5	7	9	11	13	15	16	18	20
Correction Factor	0,71	0,87	1	1,12	1,22	1,32	1,44	1,5	1,57	1,63

HHGO

HIGH PRESSURE AIRLINE FILTERS

1,70-50,0 M³/MIN

This model filters are produced in a weldless structure to withstand high pressures. High-pressure test guarantee safe and efficient operation.

Advantages

- Durable and compact
- Safe and efficient operation
- High performance
- Strong and reliable design
- Excellent high-pressure applications
- Product performance warranty
- Carbon steel filters designed for 350 bar (optional)
- Sufficient wall thickness
- High-pressure tested
- Anodised interior and exterior surfaces

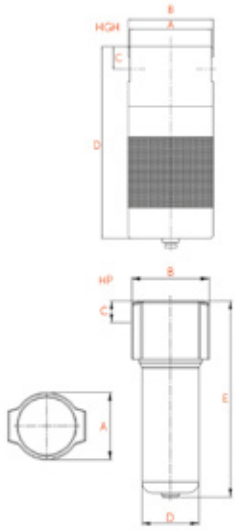

Model	Max. Pressure		Capacity		Connection Size	Element Model	Dimensions (mm)			
	bar	psi	m³/min	cfm			A	B	C	D
HHGO 100	50	725	1,7	59	G 1/4"	M25	113,4	115,4	25,75	155
HHGO 300	50	725	5,0	177	G 1/2"	M50	113,4	115,4	25,75	158,5
HHGO 600	50	725	10,0	353	G 3/4"	M100	109,4	115,4	32,25	207
HHGO 850	50	725	14,2	500	G 1"	M150	133	138	37,35	250
HHGO 1200	50	725	20,0	706	G 1"	M200	133	138	37,35	314
HHGO 1600	50	725	26,7	942	G 1 1/2"	M250	128	138	44,4	368
HHGO 2500	50	725	41,7	1471	G 2"	M2500	145	158	51,5	393
HHGO 3000	50	725	50,0	1766	G 2 1/2"	M3000	160	178	57,6	386

CORRECTION FACTORS FOR HHGO SERIES								
Working Pressure (barg)	15	20	25	30	35	40	45	50
Correction Factor	0,3	0,4	0,5	0,6	0,7	0,8	0,9	1,0

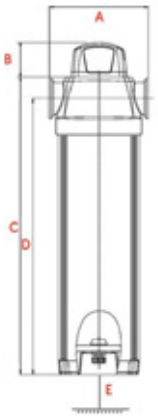

Advantages

- Specially designed for medical compressed air plants
- Partical removal down to 0.01 micron
- Suitable for steam sterilisation in an autoclave

Model	Max. Pressure		Capacity		Connec-tion Size	Dimensions (mm)				
	bar	psi	m³/min	cfm		A	B	C	D	E
HG 20 MSS	16	232	0,33	12	G 1/4"	72	19	193	100	22
HG 25 MSS	16	232	0,42	15	G 1/4"	72	19	193	100	22
HG 40 MSS	16	232	0,67	24	G 3/8"	96	20	237	110	22
HG 50 MSS	16	232	0,83	30	G 3/8"	96	20	237	110	22
HG 100 MSS	16	232	1,67	59	G 1/2"	96	20	237	150	22
HG 150 MSS	16	232	2,50	88	G 3/4"	117	34	375	190	56
HG 200 MSS	16	232	3,33	118	G 3/4"	117	34	375	250	56
HG 250 MSS	16	232	4,17	147	G 1"	117	34	465	300	56
HG 300 MSS	16	232	5,00	177	G 1 1/4"	117	34	465	350	56
HG 500 MSS	16	232	8,33	294	G 1 1/4"	117	34	530	380	56
HG 600 MSS	16	232	10,0	353	G 1 1/2"	117	34	530	425	56
HG 851 MSS	16	232	14,2	501	G 2"	170	64	722	480	56
HG 1210 MSS	16	232	20,2	712	G 2"	170	64	722	550	56
HG 1520 MSS	16	232	25,3	895	G 2 1/2"	235	72	760	430	56
HG 1820 MSS	16	232	30,3	1071	G 3"	235	72	760	550	56
HG 2220 MSS	16	232	37,0	1307	G 3"	235	72	760	600	56

They filter unwanted substances in the compressed air before they go to the system.

Advantages

- Simple design to replacement to internal element
- Two external float drains for excellent drainage
- CE and ASME tank options
- Low pressure drop
- Durable epoxy powder coating and rust-preventing anodised interior surface coating
- Strong welds
- Long service life

Model	Capacity		Connection Size	Drain Port Size	Maximum working Pressure	Element Model	Number of Elements	Housing Dimensions (mm)				
	m³/min	cfm			bar			A	B	C	D	E
HF 3600	60,0	2119	DN100	G ½"	14	M1200	3	450	1317	277	767	650
HF 4800	80,0	2825	DN100	G ½"	14	M1200	4	530	1344	279	769	650
HF 7200	120,0	4238	DN150	G ½"	14	M1200	6	580	1425	331	769	650
HF 9600	160,0	5650	DN150	G ½"	14	M1200	8	650	1439	333	798	650
HF 12000	200,0	7063	DN200	G ½"	14	M1200	10	750	1504	345	825	650
HF 16800	280,0	9888	DN200	G ½"	14	M1200	14	800	1545	383	833	650
HF 19200	320,0	11301	DN250	G ½"	14	M1200	16	850	1583	417	862	650
HF 20400	340,0	12007	DN300	G ½"	14	M1200	17	850	1680	447	887	650
HF 27600	460,0	16245	DN350	G ½"	14	M1200	23	850	1778	487	917	650
HF 33600	560,0	19776	DN350	G ½"	14	M1200	28	850	1778	487	917	650

Specifications	Pre Filtering	General Purpose	Oil Removal	Activated Carbon
Grade	P	X	Y	A
Particle Removal (Micron)	5	1	0,01	0,01
Max. Oil carryover at 21°C (mg/m³)	5	0,5	0,01	0,003
Max. working Temperature (°C)	80	80	80	25
Max.working Pressure	16	16	16	16
Initial Pressure loss (mbar)	40	80	100	80
Pressure loss for element change (mbar)	700	700	700	700
Element colour code	WHITE	WHITE	WHITE	METAL SS

CORRECTION FACTORS FOR HF COMPRESSED AIR FILTER									
Operating Pressure (barg)	1	3	5	7	9	11	13	15	16
PSIG	15	44	73	100	131	160	189	218	247
Correction Factor	0,5	0,71	0,87	1	1,12	1,22	1,32	1,44	1,57

HF Compressed Air Filter Sizing Example;

If a compressor delivers 140 m³/min at 11 bar please choose your Filter model as follow:

140 m³/min / 1,22=114,8 m³/min your model is F 7200.

NOTES

1) Grade A must not operate in oil saturated conditions.

2) Grade A elements should be replaced periodically to suit the applications but must be changed at least every six months.

3) Grade A will not remove certain gases including carbon monoxide and carbon dioxide. Please refer to works if in doubt.

4) Flow rates are based on a 7 bar operating Pressure, for flows at other. Pressures use correction factor given above.

5) All filters are suitable for use with mineral and synthetic oils.

6) Other standards for flanged connections are available.

7) Direction of air flow, inside to out, through filter element

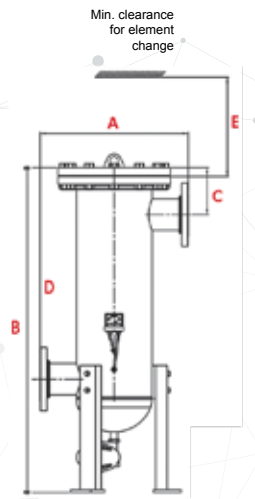

Hertz water separators are designed to remove liquid water and some particulates in compressed air at the compressor outlet. Their unique centrifugal effect separates heavier-than-air matter and the low pressure drop makes them energy-efficient.

Advantages

Hertz's HG WS water separators have 1/4" - 3" pipes for flow rates of 2200 m³/h. Line filters should be used to remove unwanted substances left in the compressed air after the extremely efficient water separators.

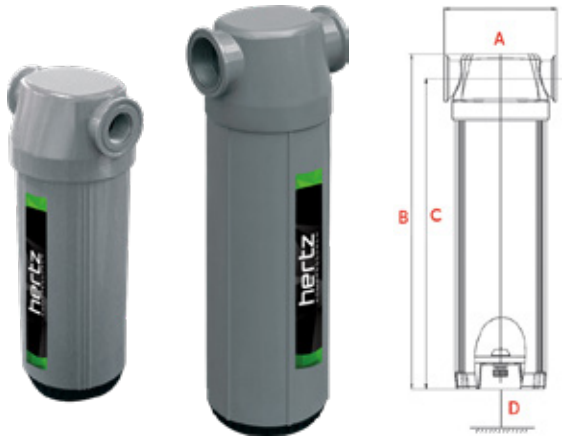

Model	Max. Pressure		Capacity		Connection Size	Dimensions (mm)			
	bar	psi	m³/min	cfm		A	B	C	D
HG 25 WS	16	232	0,4	15	G 1/4"	103	257,5	236	160
HG 100 WS	16	232	1,7	59	G 1/2"	103	257,5	236	210
HG 200 WS	16	232	3,3	118	G 3/4"	123	304	277	285
HG 300 WS	16	232	5,0	177	G 1"	123	304	277	380
HG 600 WS	16	232	10,0	353	G1 1/2"	123	320	285	470
HG 1200 WS	16	232	20,0	706	G 2"	160	484	443	560
HG 2200 WS	16	232	36,7	1295	G 3"	193	546	490	610

CORRECTION FACTORS FOR HG WS COMPRESSED AIR FILTER SERIES										
Operating Pressure (barg)	1	3	5	7	9	11	13	15	16	20
PSIG	15	44	73	100	131	160	189	218	232	290
Correction Factor	0,5	0,71	0,87	1	1,12	1,22	1,32	1,44	1,57	1,63

Hertz water separators are designed to remove liquid water and some particulates in compressed air at the compressor outlet. Their unique centrifugal effect separates heavier-than-air matter and the low pressure drop makes them energy-efficient.

Advantages

HF WS models have 3" - 8" pipes for flow rates up to 14.000 m³/h. Line filters should be used to remove unwanted substances left in the compressed air after the extremely efficient water separators.

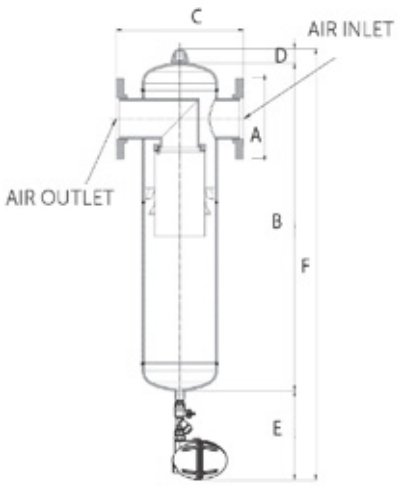

Model	Max. Pressure		Capacity		Connection Size	Dimensions (mm)					
	bar	psi	m³/min	cfm		A	B	C	D	E	F
HF 2500 WS	14	203	41,6	1471	DN80	200	934	450	75	280	1289
HF 3200 WS	14	203	53,3	1883	DN100	220	964	450	75	280	1319
HF 4300 WS	14	203	71,6	2531	DN100	220	928	530	75	280	1283
HF 6500 WS	14	203	108,3	3826	DN150	285	1092	580	75	280	1447
HF 8500 WS	14	203	141,6	5003	DN150	285	1091	650	75	280	1446
HF 11000 WS	14	203	183,3	6474	DN200	340	1168	750	75	280	1523
HF 14000 WS	14	203	233,3	8240	DN200	340	1201	800	75	280	1556

CORRECTION FACTORS FOR HF WS SERIES							
Operating Pressure (barg)	1	3	5	7	9	11	13
Correction Factor	0,5	0,71	0,87	1	1,12	1,22	1,32

Oil in aerosol form and oil mist lower the quality of the compressed air and can damage pneumatic equipment. The patented Carbolescer can eliminate both the aerosol and mist forms of oil.
It consists of a pleated separator layer, a carbon layer, and a particulate layer. The pleated separator layer removes the aerosol form of oil. When oily compressed air enters the unit, the oil droplets coalesce and run down the filter medium. The collected liquid oil is automatically drained off. The pleated separator filters out oil contaminants as small as 0.01 microns. In addition to the pleated separator, the activated carbon layer adsorbs oil mist. The oil mist is physically retained by the activated carbon granules and as a result, the oil content can be reduced to 0.003 ppm. The final particulate filter layer actively removes carbon dust and maintains the quality of the compressed air.

Advantages

- Very low pressure drops
- Remaining oil aerosol content no more than 0.003 ppm
- Equal air distribution
- Long service life
- User-friendly replacement procedure
- Oil indicator

MAX. OPERATING PRESSURE (16 BAR)								
OPERATING PRESSURE (BAR)	1	3	5	7	9	11	13	14
CORRECTION FACTOR	0,5	0,71	0,87	1	1,12	1,22	1,32	1,38

MAX. OPERATING PRESSURE (40 BAR)																	
OPERATING PRESSURE (BAR)	4,5	5	6	7	8	9	10	11	12	13	14	15	16	25	30	35	40
CORRECTION FACTOR	0,69	0,75	0,88	1	1,12	1,25	1,37	1,5	1,62	1,74	1,87	1,99	2,11	2,52	3	3,52	4

Model	Max. Remaining Oil Aerosol Content @ 21°C	Recommended Capacity @ 7 barg	Max. Operating Pressure	Connection Size Inlet-Outlet	Length	Height
	ppm	(Nm³/min)	(barg)		(mm)	(mm)
HELM-C G100-16	0,003	0,58	16	G 1/2"	102	302
HELM-C G150-16	0,003	0,75	16	G 1/2"	123	352
HELM-C G200-16	0,003	0,83	16	G 1"	123	412
HELM-C G250-16	0,003	1,16	16	G 1"	123	454
HELM-C G300-16	0,003	1,41	16	G 1 1/2"	123	507
HELM-C G500-16	0,003	1,66	16	G 1 1/2"	123	537
HELM-C G600-16	0,003	2,16	16	G 1 1/2"	123	583
HELM-C G850-16	0,003	2,83	16	G 1 1/2"	160	668
HELM-C G1210-16	0,003	3,33	16	G 2"	160	740
HELM-C F150-14	0,003	4,25	14	DN 50	500	1065
HELM-C F300-14	0,003	8,50	14	DN 50	500	1165
HELM-C F600-14	0,003	17	14	DN 50	500	1523
HELM-C F800-14	0,003	22,66	14	DN 80	500	1743
HELM-C F1200-14	0,003	34	14	DN 80	600	1606
HELM-C F1600-14	0,003	45,33	14	DN 80	600	1747
HELM-C F2100-14	0,003	59,50	14	DN 100	700	1651
HELM-C F2750-14	0,003	77,91	14	DN 100	700	1798
HELM-C F4200-14	0,003	119	14	DN 150	800	1750
HELM-C F6000-14	0,003	170	14	DN 150	800	1997
HELM-C F8000-14	0,003	226,66	14	DN 200	850	2095
HELM-C F10000-14	0,003	283,33	14	DN 250	1000	2208
HELM-C F12000-14	0,003	340	14	DN 300	1000	2775

Model	Max. Remaining Oil Aerosol Content @ 21°C	Recommended Capacity @ 7 barg	Max. Operating Pressure	Connection Size Inlet-Outlet	Length	Height
	ppm	(Nm³/min)	(barg)		(mm)	(mm)
HELM-C G15-50	0,003	1,41	50	DN 15	120	200
HELM-C G25-50	0,003	2,83	50	DN 25	140	360
HELM-C G50-50	0,003	5,66	50	DN 50	140	360
HELM-C G75-50	0,003	8,50	50	DN 75	140	360
HELM-C G100-50	0,003	11,33	50	DN 100	180	380
HELM-C G125-50	0,003	14,16	50	DN 125	180	380
HELM-C F150-40	0,003	17	40	DN 50	500	1065
HELM-C F300-40	0,003	34	40	DN 50	500	1165
HELM-C F600-40	0,003	68	40	DN 50	500	1523
HELM-C F800-40	0,003	90,66	40	DN 80	500	1743
HELM-C F1200-40	0,003	136	40	DN 80	600	1606
HELM-C F1600-40	0,003	181,33	40	DN 80	600	1747
HELM-C F2100-40	0,003	238	40	DN 100	700	1651
HELM-C F2750-40	0,003	311,66	40	DN 100	700	1798
HELM-C F4200-40	0,003	476	40	DN 150	800	1750
HELM-C F6000-40	0,003	680	40	DN 150	800	1997
HELM-C F8000-40	0,003	906,66	40	DN 200	850	2095
HELM-C F10000-40	0,003	1133,33	40	DN 250	1000	2208
HELM-C F12000-40	0,003	1360	40	DN 300	1000	2775

Air tanks are used for storage in compressed air systems. They prevent pressure fluctuations in the system and eliminate inefficiencies especially in fix speed compressor applications.

Advantages

- They allow the system to respond quickly to high and sudden consumption
- A key component of compressed air systems
- Storage function
- Reduces system pressure fluctuations
- Increases efficiency
- Galvanized and stainless steel options
- Energy saving
- Highly durable with a long service life

Model	Volume	Pressure	Configuration	Dimensions (mm)		Connection Inlet / Outlet
	L	bar		Diameter	Height	
HAR 100	100	10	VERTICAL	324	1564	G 1"
		15	VERTICAL	324	1564	G 1"
HAR 200	200	10	VERTICAL	450	1618	G 1"
		15	VERTICAL	450	1618	G 1"
HAR 300	300	10	VERTICAL	450	1918	G ¾"
		15	VERTICAL	450	1918	G ¾"
		40	VERTICAL	450	2012	G 1"
HAR 500	500	10	VERTICAL	642	1980	G 1"
		15	VERTICAL	642	1970	G 1"
		40	VERTICAL	642	2083	G 1 ¼"
HAR 900	900	10	VERTICAL	800	2120	G 1 ½"
HAR 1000	1000	10	VERTICAL	850	2120	G 1 ½"
		15	VERTICAL	850	2120	G 1 ½"
		40	VERTICAL	850	2120	G 1 ½"
HAR 1800	1800	10	VERTICAL	1150	2150	G 2"
		15	VERTICAL	1150	2150	G 2"
HAR 2000	2000	10	VERTICAL	1080	2566	G 2"
		15	VERTICAL	1080	2566	G 2"
		15	VERTICAL	1150	2240	G 2"
HAR 3000	3000	10	VERTICAL	1400	2370	G 2 ½"
		15	VERTICAL	1400	2370	G 2 ½"
HAR 4000	4000	10	VERTICAL	1400	3120	G 3"
		15	VERTICAL	1400	3120	G 3"
HAR 5000	5000	10	VERTICAL	1400	3870	G 3"
		15	VERTICAL	1400	3870	G 3"
HAR 6000	6000	10	VERTICAL	1500	3930	G 3"
		15	VERTICAL	1500	3930	G 3"
HAR 8000	8000	10	VERTICAL	1750	4040	DN100
		15	VERTICAL	1750	4040	DN100
HAR 10000	10000	10	VERTICAL	1900	4100	DN100
		15	VERTICAL	1900	4100	DN100

NITROGEN AND OXYGEN GENERATORS

HNG MOD - Modular Nitrogen Generators 42

HNG - Nitrogen Generators 44

HNIT - Nitrogen Generators 46

HDX - Nitrogen Purifier Systems 48

HCX - Nitrogen Purifier 50

HO2 - Oxygen Generators 52

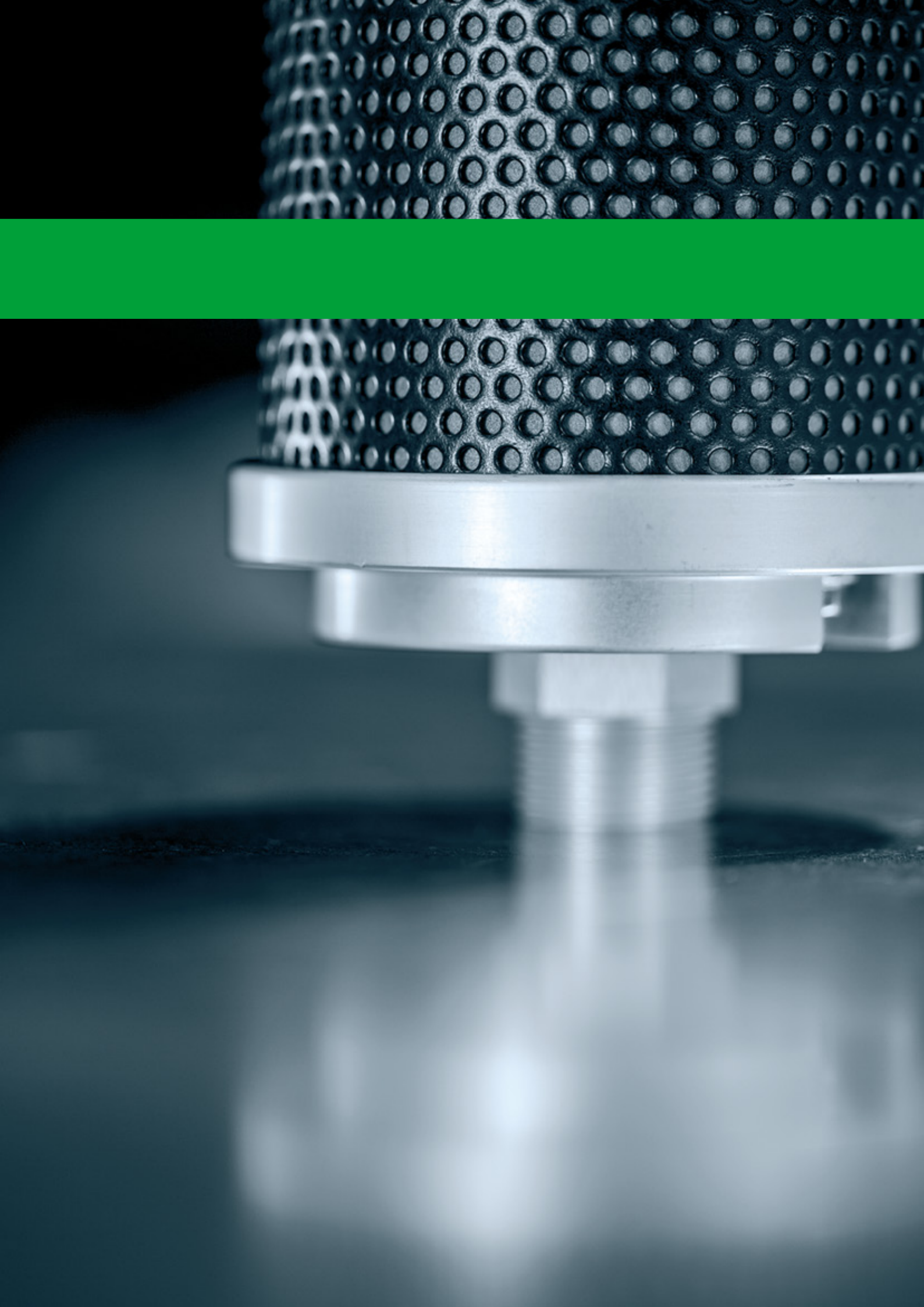

Nitrogen is separated from oxygen and enriched with the Carbon Molecular Sieve (CMS) adsorbent used in Hertz Pressure Swing Adsorption (PSA) type Nitrogen generators. Carbon Molecular Sieve (CMS) allows nitrogen to pass through the line by adsorbing oxygen and water vapor molecules under a certain pressure.
Hertz Nitrogen Generator has a compact structure through multiple modules filled with Carbon Molecular Sieve.

Clean and dry air is directed to the modules in a sequential manner for the adsorption process. The Carbon Molecular Sieve (CMS) in the modules adsorbs oxygen and water vapor molecules and keeps them in its pores, allowing nitrogen molecules to pass through. Thus, nitrogen gas is produced (Purity levels can be between 95-99.999% depending on the areas of use and customer expectations).

Advantages

- Compact design, full automated operation
- Replaces manifold usage
- New design silencer that operates at lower noise levels during pressurization and purge
- High performance
- The purity and capacity of nitrogen gas is designed to meet customer requirements
  (Nitrogen Purity 95%~99.999% is available)
- Durable piston valves for long-life operation
- Minimum maintenance cost
- Lower air-to-nitrogen (A/N) ratios and energy consumption
- High-sensitive sensor technologies
- Effective integrated filtration

Standard

- Nitrogen Modules
- Silencer
- Mini PLC
- Manometers
- Pressure Transmitter
- ECO Mod
- T Filter
- Piston Valves
- Valve Control Regulator

Optional

- Dew Point Sensor Kit
- Flowmeter Kit
- Oxygen Analyzer Kit
- 3-Way By-Pass Valve Kit
- HMI Color Touch Screen PLC
- Buffer Tank
- Oil Indicator

Model	Free Nitrogen Delivery @ following purity level (Nm³/h)									
	95%	97%	98%	99%	99,5%	99,90%	99,95%	99,99%	99,995%	99,999%
HNG MOD 20	4,3	3,9	3,3	2,5	1,7	1,5	1,5	0,7	0,6	0,4
HNG MOD 40	7,0	6,3	5,4	4,0	3,4	2,5	2,4	1,2	1,0	0,7
HNG MOD 70	12,9	11,5	9,9	7,4	5,9	4,5	4,4	2,2	1,8	1,3
HNG MOD 123	21,4	19,2	16,5	12,4	10,1	7,6	7,3	3,7	3,0	2,2
HNG MOD 210	36,9	33,0	28,5	21,4	17,6	13,0	12,6	6,3	5,1	3,8
HNG MOD 285	49,3	44,1	38,0	28,5	23,4	17,4	16,8	8,4	6,9	5,0
HNG MOD 340	60,3	54,0	46,5	34,9	28,7	21,3	20,5	10,3	8,4	6,1
HNG MOD 555	96,0	85,9	74,0	55,5	45,6	33,9	32,7	16,4	13,4	9,8
HNG MOD 735	127,0	113,7	98,0	73,5	60,4	44,8	43,2	21,7	17,7	12,9
HNG MOD 990	171,7	153,6	132,4	99,3	81,6	60,6	58,4	29,4	23,9	17,5
HNG MOD 1130	196,7	176,0	151,7	113,8	93,5	69,4	66,9	33,6	27,4	20,0
HNG MOD 1260	218,4	195,4	168,4	126,4	103,8	77,1	74,3	37,4	30,4	22,2
HNG MOD 1650	285,9	255,8	220,4	165,4	135,9	100,9	97,3	48,9	39,8	29,1

Ambient Temperature (ºC)	Correction Factor (Kt)
5	0,85
10	1
15	1
20	1
25	1
30	0,91
35	0,82
40	0,74
45	0,60

Inlet Pressure (Barg)	Correction Factor (Kp)
5	0,68
5,5	0,73
6	0,79
6,5	0,88
7	0,90
7,5	1
8	1,04
8,5	1,08
9	1,15
9,5	1,18
10	1,2

Purity (%)	Air / Nitrogen Ratio
95	1,6
97	1,6
98	1,7
99	2,1
99,5	2,4
99,9	2,8
99,95	2,9
99,99	4,8
99,995	5,8
99,999	7,4

Correction Formula: Nitrogen Delivery = Air Delivery Capacity of the Compressors / Air-Nitrogen Ratio / Kt / Kp

Nitrogen is separated from oxygen and enriched with the Carbon Molecular Sieve (CMS) adsorbent used in Hertz Pressure Swing Adsorption (PSA) type Nitrogen generators. Carbon Molecular Sieve (CMS) allows nitrogen to pass through the line by adsorbing oxygen and water vapor molecules under a certain pressure.

Nitrogen Generator produces nitrogen gas through two adsorption tanks filled with Carbon Molecular Sieve (CMS).

Clean and dry air is directed to one of the tanks in a sequential manner for the adsorption process. The Carbon Molecular Sieve (CMS) in the tank adsorbs oxygen and water vapor molecules and keeps them in its pores, allowing nitrogen molecules to pass through. Thus, nitrogen gas is produced (Purity levels can be between 95-99.999% depending on the areas of use and customer expectations).

Advantages

- Compact design, full automated operations
- Replaces manifold usage
- Touch Screen PLC for controlling the complete system
- New design silencer that operates at lower noise levels during pressurization and purge
- Durable piston valves for long-life operation
- The purity and capacity of nitrogen gas is designed to meet customer requirements
  (Nitrogen Purity 95%~99.999% is available)
- Minimum maintenance cost
- Lower air-to-nitrogen (A/N) ratios and energy consumption

Standard

- Nitrogen Tanks
- Silencer
- Mini PLC
- Tank Manometers
- Pressure Transmitter
- T Filter
- Piston Valves
- Valve Control Regulator

Optional

- Dew Point Sensor Kit
- Flowmeter Kit
- Oxygen Analyzer Kit
- 3-Way By-Pass Valve Kit
- HMI Color Touch Screen PLC
- Buffer Tank
- Oil Indicator

Model	Free Nitrogen Delivery @ following purity level (Nm³/h)									
	95%	97%	98%	99%	99,5%	99,90%	99,95%	99,99%	99,995%	99,999%
HNG 140	27,5	23,4	23,0	15,3	12,0	9,8	8,3	4,7	3,7	2,9
HNG 185	36,7	31,3	30,8	20,4	16,1	13,1	11,1	6,2	4,9	3,9
HNG 225	45,0	38,3	37,7	24,9	19,7	16,1	13,6	7,6	6,0	4,8
HNG 360	71,5	60,9	59,9	39,7	31,3	25,6	21,6	12,1	9,5	7,6
HNG 475	94,7	80,6	79,3	52,5	41,4	33,8	28,7	16,0	12,6	10,0
HNG 640	127,9	108,9	107,2	71,0	55,9	45,7	38,7	21,7	17,0	13,5
HNG 700	146,5	124,7	122,8	81,3	64,1	52,4	44,4	24,8	19,5	15,5
HNG 810	162,7	138,5	136,4	90,3	71,2	58,2	49,3	27,6	21,6	17,2
HNG 1065	213,0	181,3	178,5	118,2	93,1	76,2	64,5	36,1	28,3	22,5
HNG 1300	260,6	221,8	218,3	144,6	113,9	93,2	78,9	44,1	34,6	27,6
HNG 1580	316,8	269,6	265,4	175,7	138,5	113,3	95,9	53,7	42,1	33,5
HNG 1750	349,5	297,4	292,8	193,9	152,8	124,9	105,8	59,2	46,5	37,0
HNG 1940	387,2	329,5	324,5	214,8	169,3	138,4	117,2	65,6	51,5	41,0
HNG 2610	523,6	445,6	438,7	290,4	228,9	187,2	158,5	88,7	69,6	55,4
HNG 3050	610,6	519,6	511,6	338,7	266,9	218,3	184,9	103,5	81,2	64,6
HNG 3660	430,5	622,9	613,3	406,1	320,0	261,7	221,5	124,0	97,3	77,4
HNG 4500	902,8	768,3	756,5	500,8	394,7	322,8	273,3	153,0	120,0	95,5
HNG 5290	1058,0	900,4	886,5	587,0	462,6	378,3	320,3	179,3	140,7	111,9
HNG 6100	1220,1	1038,3	1022,3	676,8	533,5	436,2	369,3	206,7	162,2	129,1
HNG 7340	1468,7	1249,9	1230,7	814,8	642,2	525,1	444,6	248,8	195,3	155,4
HNG 9060	1812,9	1542,8	1519,0	1005,7	792,7	648,1	548,7	307,2	241,0	191,8
HNG 10780	2156,7	1835,5	1807,1	1196,5	943,0	771,1	652,8	365,4	286,7	228,1
HNG 12100	2422,5	2061,5	2029,7	1343,8	1059,1	866,0	733,2	410,4	322,0	256,2
HNG 14780	2958,6	2517,9	2479,5	1641,3	1293,6	1057,8	895,5	501,3	393,3	312,9

Ambient Temperature (ºC)	Correction Factor (Kt)
5	0,85
10	1
15	1
20	1
25	1
30	0,91
35	0,82
40	0,74
45	0,60

Inlet Pressure (Barg)	Correction Factor (Kp)
5	0,68
5,5	0,73
6	0,79
6,5	0,88
7	0,90
7,5	1
8	1,04
8,5	1,08
9	1,15

Purity (%)	Air / Nitrogen Ratio
95	1,4
97	1,6
98	1,6
99	2,1
99,5	2,4
99,9	2,8
99,95	2,9
99,99	4,6
99,995	5,8
99,999	7,2

Correction Formula: Nitrogen Delivery = Air Delivery Capacity of the Compressors / Air-Nitrogen Ratio / Kt / Kp

Thanks to the PSA technology utilized by Hertz nitrogen generators, you can produce nitrogen gas with up to 99.999% purity within the capacity range of 0.5-5000 Nm^3/h.

These generators produce nitrogen from the compressed air available. The compressed air is cleaned by pre-filtration which eliminates impurities, such as humidity, oil vapours, particles and hydrocarbons.

The filrated compressed air is directed to two CMS filled columns. While the compressed air is passing through the generator, the oxygen and carbon dioxide molecules are removed and the pressure dew point is lowered. The generated nitrogen gas is clean, dry and of high purity so that it can be used for a wide variety of applications.

The parameters such as compressed air temperature, pressure, nitrogen purity and nitrogen pressure are all monitored continuously. Hertz nitrogen generators guarantee sustainable and high efficiency production.

Advantages

- Stainless steel pipes and process valves
- Zirconia oxygen sensor
- Outlet pressure sensor
- Visual & Audio alarm for low purity
- Visual & Audio alarm for low pressure
- Visual alarm for periodical maintenance
- Automatic start/stop
- Outlet nitrogen regulator
- Outlet nitrogen needle valve
- Advanced energy saving kit
- Siemens S/ 1200 PLC

Model	Free Nitrogen Delivery @ Folowing Purity Level (Nm³/min)								
	95,00%	97,00%	98,00%	99,00%	99,50%	99,90%	99,99%	99,995%	99,999%
HNIT 25	0,097	0,082	0,070	0,053	0,042	0,027	0,017	0,012	0,008
HNIT 50	0,182	0,148	0,133	0,100	0,083	0,053	0,025	0,020	0,017
HNIT 80	0,283	0,225	0,202	0,153	0,133	0,082	0,042	0,030	0,023
HNIT 100	0,350	0,292	0,267	0,215	0,167	0,108	0,055	0,042	0,032
HNIT 150	0,525	0,433	0,400	0,317	0,250	0,158	0,083	0,062	0,042
HNIT 250	0,833	0,675	0,597	0,475	0,417	0,217	0,108	0,083	0,058
HNIT 400	1,417	1,000	0,917	0,800	0,667	0,417	0,217	0,158	0,100
HNIT 500	1,800	1,417	1,300	1,083	0,833	0,630	0,395	0,282	0,178
HNIT 700	2,417	2,000	1,667	1,333	1,167	0,805	0,467	0,352	0,238
HNIT 1000	3,583	2,917	2,467	1,917	1,667	1,200	0,700	0,527	0,357
HNIT 1200	4,333	3,583	3,167	2,417	2,000	1,450	0,850	0,650	0,450
HNIT 1700	6,250	5,167	4,500	3,467	2,833	2,167	1,250	0,933	0,642
HNIT 2000	7,417	6,167	5,333	4,033	3,333	2,533	1,483	1,117	0,750
HNIT 3000	10,583	8,750	7,667	6,000	5,000	3,617	2,100	1,583	1,083
HNIT 4000	15,333	12,667	11,000	8,333	6,667	5,217	3,033	2,292	1,563
HNIT 5500	19,167	15,833	13,833	10,583	9,167	6,533	3,783	2,867	1,942
HNIT 6500	23,000	19,000	16,500	12,583	10,833	7,833	4,550	3,448	2,333
HNIT 7500	26,667	22,083	19,333	14,667	12,500	9,417	5,417	4,083	2,783
HNIT 8500	30,500	25,250	22,083	16,667	14,167	10,417	6,033	4,583	3,108
HNIT 10000	38,333	31,667	27,500	21,000	16,667	12,333	7,583	5,733	3,867
HNIT 12500	45,833	37,917	33,083	25,000	20,833	15,750	9,167	6,917	4,700

CMS Temperature (°C) - Correction Factor (Kt)									
Temperature °C	10	15	20	25	30	35	40	45	50
Correction Factor	1	1	1	1	0,94	0,86	0,81	0,77	0,72

Inlet Pressure (Barg) - Correction Factor (Kp)									
Pressure (bar[g])	6	6,5	7	7,5	8	8,5	9	9,5	10
Correction Factor	0,9	0,95	1	1,02	1,05	1,09	1,12	1,14	1,15

Purity (%) – Air / Nitrogen Ratio									
Purity (%)	95	97	98	99	99,5	99,9	99,99	99,995	99,999
Air/Nitrogen Ratio	1,9	2,1	2,3	2,6	2,9	3,28	4,61	5,11	6,59

Pressure Drop (Air Inlet - Generator Outlet)						
Purity (%)	95	97	98	99	99,5	99,9 - 99,999
Pressure (bar[g])	1,5	1,5	1,25	1,25	1	1

Hertz's brand new HDX Nitrogen Treatment System offers an extremely economic means of increasing the required nitrogen purity beyond 99.9% to 99.999%.
The HDX Series uses a specially designed catalyst with a large surface area to increase nitrogen purity. The oxygen left on the catalyst surface after the reaction is reduced to no more than 10 ppm.
HDX Nitrogen Treatment Devices when used in conjunction with Nitrogen Generator System use small amounts of hydrogen to prevent compressed air loss and deliver very pure nitrogen. This system delivers very pure nitrogen while keeping power consumption to a minimum.

Advantages

- Short payback period
- Small footprint
- Long-lasting efficiency (> 10 years)
- Best quality high-performance solutions
- Investing in a lower capacity HDX system instead of a higher capacity HNG system for the same purity of nitrogen reduces costs and saves on energy
- Up to 99.999% nitrogen purity with minimum space and energy requirements
- Low energy consumption
- Low CO_2 emissions
- Heavy-duty build designed for hard conditions and industrial use
- High-quality and durable components
- System produces minimum 99.999% pure nitrogen with a very low air/nitrogen ratio (3.0 instead of 8.4).
- Compact design, fully automated system
- 24/7 nitrogen production at the desired purity
- High energy savings
- Low-cost and special production
- Minimum maintenance costs

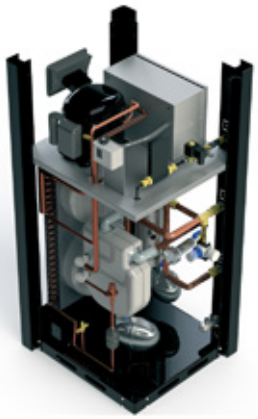

Working Principle

Compared with existing applications, Hertz's compact designed Nitrogen Treatment System can take nitrogen produced at 99.9% purity and convert it to 99.999% pure nitrogen while delivering considerable energy savings in nitrogen production costs.

The system uses a catalytic reaction to remove the oxygen left over from the HNG generator from the PSA Nitrogen Generator outlet by utilizing the reaction between the residual oxygen and hydrogen to produce 99.999% pure nitrogen. The only by-product of this catalytic reaction is water.

The low cost of the hydrogen needed for the reaction results in considerable long-term savings.
In fact, this newly developed nitrogen purifier lets you produce extremely pure nitrogen using lower capacity air compressors and equipment.

As the reaction increases the temperature of the nitrogen, the HDX Nitrogen Purifying System is integrated into a High-Temperature Air Dryer, combining two products in a single unit for a complete solution.

Model	N_2 Flow at 99.999% Purity (m^3/min)
HDX 10	0,017
HDX 20	0,033
HDX 35	0,058
HDX 60	0,100
HDX 95	0,173
HDX 120	0,232
HDX 150	0,283
HDX 250	0,452
HDX 330	0,597
HDX 450	0,807
HDX 510	0,925
HDX 570	1,027
HDX 730	1,343
HDX 910	1,643
HDX 1110	1,998
HDX 1230	2,205
HDX 1370	2,443
HDX 1820	3,303
HDX 2050	3,852
HDX 2550	4,618
HDX 2950	5,697
HDX 3540	6,675
HDX 4160	7,698
HDX 5560	9,267
HDX 6050	11,438
HDX 7500	13,607
HDX 9170	15,283
HDX 11200	18,667

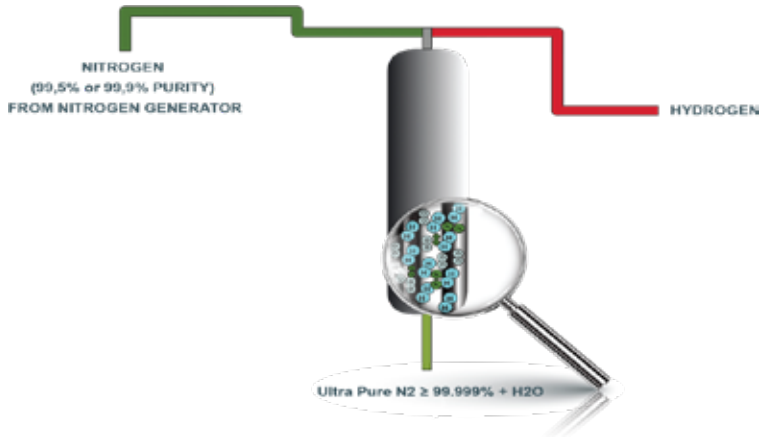

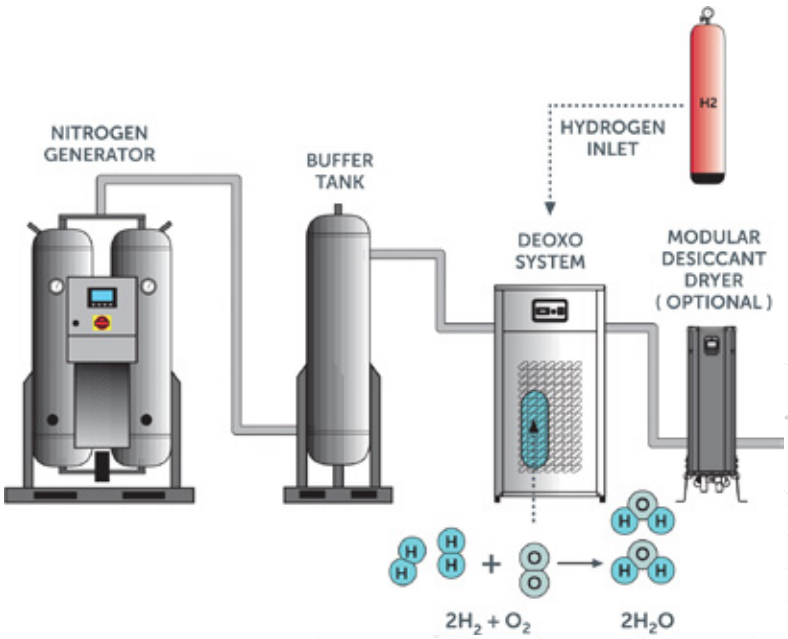

Most PSA Nitrogen Generator users require the highest levels of Nitrogen purity by the most cost-effective means possible.
Hertz HCX Nitrogen Purifier System offers an extremely economic way to increase nitrogen purity levels beyond
99.9% all the way up to 99.9999% purity.
HCX is the true add-on technology for Nitrogen Generation applications requiring 1-5 ppm ultra high purity.
HCX can easily be integrated with already existing Nitrogen Generator System (free from brand) resulting in high purity nitrogen gas at minimum costs.

Advantages

- Easily integration with any brand of Nitrogen Generator
- Power Savings up to 50%
- Reduced compressed air consumption
- More effective pay-back time compared to the HCX-free system
- Class 6.0 quality highest purity nitrogen
- Auto purity control system
- Easy maintenance - compact design
- Minimized installation area
- Cost-effective through low operating costs

HOW IT WORKS?

The nitrogen gas obtained from a nitrogen generator is enriched with a minimum amount of hydrogen before it passes into the catalyst. The hydrogen reacts with the residual oxygen of the nitrogen, the chemical reaction being water vapor and heat, which are removed by filtration & drying.

Thanks to our innovative HCX system you can produce ultra-pure nitrogen with smaller air compressors.

Properties

- Fast start-up time
- Inlet and outlet N_2 purity control
- Inlet and outlet N_2 pressure sensors
- N_2 inlet flow (m^3/h) and N_2 total volume (m^3) monitoring
- N_2 outlet dew point (°C)
- H_2 Inlet flow (l/h) and H^2 total volume (liters)
- HCX reactor temperature sensor (°C)
- HCX reactor with auto-heater & insulation
- Working hours counter
- Remote control and monitoring
- Industry 4.0

Model	Nitrogen Purity (%)	Capacity (Nm^3/min)	Power Consumption (kW/h)	Voltage	Noise Level dB(A)
HCX 20	99,9999	0,41	20	230/1/50	55-85
HCX 40	99,9999	0,66	28	230/1/50	55-85
HCX 60	99,9999	0,83	35	230/1/50	55-85
HCX 80	99,9999	1,33	51	230/1/50	55-85
HCX 100	99,9999	1,58	60	230/1/50	55-85
HCX 150	99,9999	2,33	90	230/1/50	55-85

Thanks to the PSA technology utilized by Hertz Oxygen Generators, you can produce oxygen gas with up to 95 % purity within the capacity range of 0.5-2000 Nm³/h.

These generators produce oxygen from the compressed air available. The compressed air is cleaned by pre-filtration which eliminates impurities, such as humidity, oil vapours, particles and hydrocarbons.

The filtrated compressed air is directed to ozolite filled columns. While the compressed air is passing through the generator, the nitrogen and carbon dioxide molecules are removed and the pressure dew point is lowered. The generated oxygen gas is clean, dry and of high purity so that it can be used for a wide variety of applications.

The parameters such as compressed air temperature, pressure, oxygen purity and oxygen pressure are all monitored continuously. Hertz oxygen generators guarantee sustainable and high efficiency production.

Pneumatic valves that ensure regular flow of air and oxygen during the process are manufactured from AISI 316L noncorrosive material. Owing to its long operation life, it provides problem free production for long years. Moreover, 316L stainless steel valves no need for maintenances.

Advantages

- Consistently high purity guaranteed
- Low compressed air consumption and maintenance costs
- Ease of use and maintenance
- Siemens S/1200 PLC
- Instant monitoring and recording of parameters such as purity, pressure, flow rate on the screen
- Visual and audio alarms for various parameters
- Remote control
- Fully automatic operation

Model	Free Oxygen Delivery @ Folowing Purity Level					
	90%		93%		95%	
	(m³/min)	cfm	(m³/min)	cfm	(m³/min)	cfm
HO2 10	0,013	0,46	0,012	0,42	0,010	0,35
HO2 20	0,023	0,81	0,020	0,71	0,017	0,60
HO2 30	0,043	1,52	0,040	1,41	0,035	1,24
HO2 40	0,063	2,22	0,058	2,05	0,053	1,87
HO2 60	0,093	3,28	0,085	3,00	0,075	2,65
HO2 100	0,163	5,76	0,142	5,01	0,133	4,70
HO2 120	0,208	7,35	0,192	6,78	0,167	5,90
HO2 150	0,250	8,83	0,225	7,95	0,205	7,24
HO2 200	0,333	11,76	0,283	9,99	0,267	9,43
HO2 300	0,500	17,66	0,448	15,82	0,417	14,73
HO2 400	0,700	24,72	0,633	22,35	0,583	20,59
HO2 600	1,000	35,31	0,917	32,38	0,833	29,42
HO2 800	1,333	47,07	1,225	43,26	1,117	39,45
HO2 1000	1,750	61,80	1,583	55,90	1,500	52,97
HO2 1400	2,333	82,39	2,083	73,56	1,833	64,73
HO2 1500	2,583	91,22	2,333	82,39	2,133	75,33
HO2 2000	3,250	114,77	2,933	103,58	2,667	94,18
HO2 2500	4,083	144,19	3,750	132,43	3,417	120,67
HO2 3000	4,917	173,64	4,417	155,98	4,083	144,19
HO2 4000	6,500	229,55	5,917	208,96	5,417	191,30

CMS CORRECTION FACTORS									
Temperature °C	10	15	20	25	30	35	40	45	50
Correction Factor	1	1	1	1	0,94	0,86	0,81	0,77	0,72

AIR INLET FACTORS				
Pressure (bar[g])	6	6,5	7	7,5
Correction Factor	0,9	0,95	1	1

AIR FACTORS			
Purity (%)	90	93	95
Air/Oxygen Ratio	11,5	12	12

PRESSURE DROP (AİR INLET - GENERATOR OUTLET)			
Purity (%)	90	93	95
Pressure (bar[g])	1,5	1,5	2

hertz
hertz

SERVICE & MAINTENANCE

- If compressed air is essential to your daily operations, it is vital to keep the components of your compressed air supply system well maintained.
- Each component of an air compressor has a specific function. The regular maintenance of the air compressor will ensure a better quality of compressed air and energy efficiency, further improving business productivity and profits.
- Beyond that identifying certain areas of repairs or more importantly timely interventions can help you save on energy consumption and cost.

We are at the closest point to your compressor

- We provide a worldwide network of highly qualified Hertz service technicians and specially trained and authorized service partners.

We leave nothing to chance

- As Hertz, we know how important quality is. Therefore, we are extremely careful and ensure that the compressor always has the right conditions to function in its plant.
- When we repair, we assess and recommend any measures regarding service life and efficiency. We also perform mechanical processing of the compressor's various components.

Building the Future!

Hertz Kompressoren Global
export@hertz-kompressoren.com

Hertz Kompressoren Gmbh
Kronacherstr. 60, 96052 Bamberg
Tel: +49 951 96 43 13 88 Fax: +49 951 96 43 13 50
e-mail: info@hertz-kompressoren.de

Hertz Kompressoren USA Inc.
11910 Mount Holly-Huntersville Road
Huntersville, NC 28078 USA
Tel: +1 704 579 59 00 Fax: +1 704 579 59 97
e-mail: info@hertz-kompressoren.us

hertz
KOMPRESSOREN